(Updated 1/1/11)
Table of Contents
Town of Boone
Water & Sewer Ordinance

ARTICLE I COVERAGE AND DEFINITIONS 1
Section 1-1. Authority 1
Section 1-2. Title 1
Section 1-3. Definitions 1
Section 1-4. Hardship Policy 8
Section 1-5. Unusual Fact Guidelines 9
Section 1-6. Purpose and Intent 9
Section 1-7. Abrogation and Greater Restrictions 9
Section 1-8. Interpretation 9
Section 1-9. Severability of Ordinance Provisions 10
Section 1-10. Repeal 10
Section 1-11 to 1-12. Reserved 10

ARTICLE II WATER SYSTEM STANDARDS 11
Section 2-1. General Information 11
Section 2-2. Water System Specifications 13
Section 2-3. Underground Packaged Water Booster Pumping Station 31
Section 2-4. Standard Details 47

ARTICLE III WATER SYSTEM REGULATIONS 48
Section 3-1. Classification of Service 48
Section 3-2. Rate Schedule and Tap-On Fee 48
Section 3-3. Application for Service 49
Section 3-4. Deposit 49
Section 3-5. Initial or Minimum Charge 49
Section 3-6. Towns Responsibility and Liability 50
Section 3-7. Consumers Responsibility 50
Section 3-8. Access to Premises 51
Section 3-9. Change of Occupancy 51
Section 3-10. Meter Reading - Billing - Collecting 52
Section 3-11. Suspension of Service 53
Section 3-12. Prohibited Activities 54
Section 3-13. Termination or Interruption of Service by Town 54
Section 3-14. Notice of Proposed Termination of Service and Right of Hearing 55
Section 3-15. Hearing 55
Section 3-16. Deposit Required to Stay Termination 56
Section 3-17. Procedure for Service Termination and Reinstatement 56
Section 3-18. Termination at Customers Request 56
Section 3-19. Suspension of Service 57
Section 3-20. Complaints - Adjustments 57
Section 3-21. Abridgment or Modification of Rules 57

Section 3-22. Adoption of Rules 57
Section 3-23. Availability Fee 58

ARTICLE IV SEWER USE REGULATIONS 63
Section 4-1. Findings and Declaration of Policy 63
Section 4-2. Reserved 63
Section 4-3. Unlawful to Deposit 63
Section 4-4. Unlawful to Discharge 63
Section 4-5. Unlawful to Construct 63
Section 4-6. Required Facilities 63
Section 4-7. Rainwater Harvesting and Reuse Systems 64
Section 4-8. Private Wastewater Disposal 64
Section 4-9. Permit Required 64
Section 4-10. Effective Date of Permit 64
Section 4-11. Compliance of Private Wastewater Systems 65
Section 4-12. Required Connection 65
Section 4-13. Sanitary Manner 65
Section 4-14. Additional Requirements 65
Section 4-15. Use of Grey Water Prohibited 65
Section 4-16. Unauthorized Connections 65
Section 4-17. Building Sewer Permits 65
Section 4-18. Costs of Installation 66
Section 4-19. Separate Sewers Required 66
Section 4-20 to 4-21. Reserved 66
Section 4-22. Old Building and Existing Building Sewers 66
Section 4-23. Standards 68
Section 4-24. Unauthorized Connections 85
Section 4-25. Requirements of Connections 85
Section 4-26. Inspection of Sewer 85
Section 4-27. Excavations 85
Section 4-28. Owner Maintenance Requirements 85
Section 4-29. Reserved 86
Section 4-30. Vandalism of Wastewater Disposal System 86
Section 4-31. Powers and Authority of Inspectors 86
Section 4-32. Penalties 87
Section 4-33. Establishment of Revenue System 87
Section 4-34 to 4-36. Reserved 88

ARTICLE V USER PENALTIES FOR SEWER SYSTEM 89
Section 5-1. Findings and Declaration of Policy 89
Section 5-2. Reserved 89
Section 5-3. Rates in Effect 89
Section 5-4. Excessive Strength in Wastewater 89
Section 5-5. Toxic Rates 89
Section 5-6. Monitoring Rate 89

ARTICLE VI **WATER AND SEWER EXTENSIONS** 90
Section 6-1. General 90
Section 6-2. Extensions to Mains and Services 99
Section 6-3. Extensions of Service to Developed Property Within the Town 90
Section 6-4. In-Town Extensions to and Within New Subdivisions and Other New Developments 91
Section 6-5. Replacement of Dilapidated Water and/or Sewer Lines 91
Section 6-6. Extensions Outside of Town 92
Section 6-7. Extensions Made by Other Than Town Forces 94
Section 6-8. Inspection by Town of Work Done by Others 95
Section 6-9. Easements Necessary for Line Extensions 95
Section 6-10. Dedication of Water and Sewer Line Extensions 96
Section 6-11. Reserved 96

ARTICLE VII **WATER CONSERVATION REGULATIONS** 97
Section 7-1. Applicability of Water Conservation Regulations 97
Section 7-2. Reserved 97
Section 7-3. Announcement of Water Shortage 97
Section 7-4. Goals for Each Water Shortage 98
Section 7-5. Specific Conservation Methods and Recommendations Applicable to All Water Shortages 98
Section 7-6. Reserved 99
Section 7-7 Stage II Water Shortage Restrictions 99
Section 7-8. Reserved 100
Section 7-9. Stage III Water Shortage Restrictions and Measures. 100
Section 7-10. River Operating Conditions 100
Section 7-11. Penalties 101
Section 7-12. Appeals 102
Section 7-13. Lifting of Restrictions Imposed During a Water Shortage 102

ARTICLE VIII **PRETREATMENT STANDARDS** 103
Section 8-1. Illegal Discharges 103
Section 8-2. Unpolluted Drainage 103
Section 8-3. General Provisions 103
Section 8-4. General Sewer Use Requirements 112
Section 8-5. Local Limits 116
Section 8-6. State Requirements 117
Section 8-7. Right of Revision 117
Section 8-8. Dilution 117
Section 8-9. Pretreatment of Wastewater 117
Section 8-10. Accidental Discharge/Slug Control Plans 118
Section 8-11. Hauled Wastewater 118
Section 8-12. Unauthorized Quantities 119
Section 8-13. Grease, Oil and Sand Trap Conditions 120
Section 8-14. Fees 121
Section 8-15. Wastewater Discharge Permit Application and Issuance 123

Section 8-16. Reporting Requirements 130
Section 8-17. Compliance Monitoring 136
Section 8-18. Confidential Information 137
Section 8-19. Enforcement 138
Section 8-20. Annual Publication of Significant Noncompliance 142
Section 8-21. Affirmative Defenses to Discharge Violations 142
Section 8-22. Severability 144
Section 8-23. Conflict 144
Section 8-24 to 8-26. Reserved 145

ARTICLE IX CROSS CONNECTION CONTROL STANDARDS 146
Section 9-1. Introduction 146
Section 9-2. Objectives of Ordinance 146
Section 9-3. Responsibilities 146
Section 9-4. Definitions 148
Section 9-5. Right of Entry 154
Section 9-6. Elimination of Cross Connections: Degree of Hazard 154
Section 9-7. Installation of Assemblies 155
Section 9-8. Testing and Repair of Assemblies 157
Section 9-9. Facilities Requiring Protection 158
Section 9-10. Connections with Unapproved Sources of Supply 161
Section 9-11. Fire Protection Systems 161
Section 9-12. Enforcement 162
Section 9-13. Adoption 163

ARTICLE X GREASE PREVENTION PROGRAM STANDARDS 164
Section 10-1. Purpose 164
Section 10-2. Definitions 164
Section 10-3 Grease Prevention Program 166

APPENDIX A . . . . . (SEE ILLUSTRATIONS)

APPENDIX B 171

APPENDIX C 173

APPENDIX D 175

TOWN OF BOONE
WATER AND SEWER USE ORDINANCE

ARTICLE I
COVERAGE AND DEFINITIONS

Section 1-1. Authority.

These Ordinances are adopted under the authority granted by North Carolina General Statutes 160A.

Section 1-2. Title.

These Ordinances shall be known under the general title of, referred to, or cited as the WATER AND SEWER USE ORDINANCE FOR THE TOWN OF BOONE, STATE OF NORTH CAROLINA, and hereinafter referred to as the Ordinance.

Section 1-3. Definitions.

For the purpose of this ordinance, the following definitions shall be used. Words used in the present tense include the future; the singular number includes the plural number; and the plural number includes the singular number. The word shall is mandatory and not directory, while the word may is permissive.

Act shall mean the Federal Water Pollution Control Act Amendments of 1972, as amended, Public Law 92-500, as amended, 33 U.S.C.S. 1251 et seq. (Supp. IV, 1974).

Administrator shall mean that person or persons selected by the Town Manager or Town Council to carry out the provisions of this Ordinance.

Affordable Owner-Occupied Dwelling Unit shall mean an affordable owner-occupied dwelling unit is a room or group of rooms within a dwelling forming a single independent habitable unit containing independent kitchen, sanitary, and sleeping facilities, which complies with the Town of Boone Minimum Housing Code, and which has been sold or will be offered for sale for a gross price at which the monthly gross principal and interest payment, in a mortgage financing 90% of the purchase price, amortized over a period of thirty years and calculated with interest at the legal rate, is no greater than twenty-five per cent of the monthly Area Median Income for a family of four, as established annually by the United States Department of Housing and Urban Development, and, if sold, the purchaser of which is a family in need of housing protection.

Affordable Owner-Occupied Housing Development shall mean an affordable owner-occupied housing development is one in which more than fifty percent of the included dwelling units are, or upon completion of the development, will be, affordable owner-occupied dwelling units, as that

phrase is defined herein.

Affordable Rental Dwelling Unit shall mean an affordable rental dwelling unit is a room or group of rooms within a dwelling forming a single independent habitable unit containing independent kitchen, sanitary, and sleeping facilities, which complies with the Town of Boone Minimum Housing Code, for which the monthly gross rental payment is no greater than twenty-five per cent of the monthly Area Median Income for a family of four, as established annually by the United States Department of Housing and Urban Development, and which is occupied by a family in need of housing protection.

Affordable Rental Housing Project shall mean an affordable rental housing project is one in which more than fifty percent of the included dwelling units are, or upon completion of the project, will be, affordable rental dwelling units, as that phrase is defined herein.

Availability Fee shall mean the fee charged

a. to all new customers to the Towns water and/or sewer system and

b. to all existing customers who expand their home or business, thereby increasing their demand for water and/or sewer service.

Billable Excess Biochemical Oxygen Demand (BOD) shall mean a users loading in pounds of BOD calculated using the billable flow and concentration of BOD in the waste in excess of 400 mg/l as determined by the Superintendent.

Billable Flow shall mean a users recorded water usage as metered by the appropriate water utility, plus metered water from wells and other sources, and less any sewer-exempt metered data, times the local government approved percentage factor for wastewater entering the sewer system out of the metered water.

Billable Excess Total Suspended Solids (TSS) shall mean a users loading in pounds of TSS calculated using the billable flow and concentration of TSS in the waste in excess of 400 mg/l as determined by the Superintendent.

Biochemical Oxygen Demand (BOD) shall mean the quantity of oxygen, expressed in milligrams per liter (mg/l) utilized in the biochemical oxidation of organic matter under standard laboratory procedures in five (5) days at 20 degrees Centigrade.

Building Drain shall mean that part of the lowest horizontal piping of a drainage system which receives sanitary or industrial sewage only and is located inside the walls of a building and conveys the sewage to the building sewer, which begins five (5) feet outside the building wall.

Building Sewer shall mean the extension from the building drain to the public sewer or other place of disposal and conveys only sanitary or industrial sewage. This is also known as a house

connection.

Classes of Users means the division of wastewater treatment customers by waste characteristics and process discharge similarities or function, such as residential, commercial, institutional, industrial or governmental.

Collection Sewer shall mean a sewer whose primary purpose is to collect wastewaters from individual point source discharge.

Commercial User shall mean, for the purpose of the user charge system, a user engaged in the purchase or sale of goods or in a transaction or business or who otherwise renders a service. In addition, for billing purposes, commercial user shall refer to any commercial, industrial, public and/or institutional user, as well as any residential user with meter size greater than one inch (1").

Costs of Labor and Materials shall mean actual costs of meters, fittings, pipe, adapters and replacement of paving as well as the necessary labor and equipment costs to accomplish the installation.

Customer shall mean any individual, family, business or institution that hooks on to the Towns water and/or sewer system and uses the same.

Developed Property shall mean all property that has a habitable residential, commercial, industrial or institutional structure existing on such property on or before the effective date of this ordinance. Any existing subdivisions platted and recorded before the effective date of this Ordinance and not developed as defined above shall fall under the provisions of a new subdivision as described in Subchapter D Section 13-6 of this Ordinance.

Easement shall mean an acquired legal right, less than fee simple, for a specific use of land owned by others.

Family in Need of Affordable Housing shall mean a family in need of housing protection is one or more individuals related by blood, marriage, or adoption, living with each other in a "common law" or spousal relationship without the benefit of marriage, or as "domestic partners," occupying a premises and living as a single, non-profit housekeeping unit, including domestic servants, live-in help, including: [a] a single person or married couple; [b] a single person or married couple's biological, foster or adopted child, a step-child, or other legal ward; [c] a single person or married couple's parents, siblings, and persons preceding or succeeding generation denoted by the prefixes of grand, great or great-great; [d] spouses of any persons named in the above groups; [e] cousins, who are defined to be relatives who are decedents from a common grandparent, with an aggregate current income <u>and</u> aggregate income for the previous twelve months equal to or less than the Area Median Income, as established annually by the United States Department of Housing and Urban Development, and for which the head of the household is not claimed as a dependent on the federal tax return of any other person currently or in the most recently completed federal tax year, and for which any other adult occupant(s) is not and can not be currently claimed as a dependent(s) for

federal tax purposes by any person(s) not residing in the dwelling unit.

Financial Hardship shall be defined as an individual and/or family living below the poverty level as defined by the United States Government.

Floatable Oil shall mean oil, fat or grease in a physical state such that it will separate by gravity from wastewater by treatment in a pretreatment facility approved by the local government. Wastewater shall be considered free of floatable fat if it is properly pre-treated and the wastewater does not interfere with the collection system.

Garbage shall mean the animal or vegetable wastes from the domestic and commercial preparation, cooking and dispensing of food, and from the commercial handling, storage and sale of produce.

Grey Water is water generated from the use of the shower, bathtub, spa bath, hand basin, laundry tub, clothes washing machine, kitchen sink, and/ **or** dishwasher. Grey water may not contain wastewater from the toilet, urinal or bidet.

Health Officer shall mean any person designated by the Town Council to be responsible for maintaining sanitary conditions and reporting violations.

Hook on Fee shall mean a fee equal to the actual labor, equipment and materials cost incurred by the Town installing the necessary lines and meter for the Customer.

Industrial Cost Recovery System shall mean the system of charges levied to recover from the industrial users of the wastewater disposal system the federal grant amount, issued under Public Law 92-500, as amended, allocatable to the construction of facilities for treatment of wastes from such industrial users. These charges are separate from and not a part of the wastewater treatment bill whose constituent elements include the user charge system and the billing and collection charge.

Industrial User shall mean, for the purpose of the user charge system, a manufacturing or processing facility which is engaged in a production or profit-making venture. For the purpose of the industrial cost recovery system, an industrial user shall mean any non-governmental user of public-owned treatment works, identified in the Standard Industrial Classification Manual, 1972, as amended and supplemented, prepared by the Statistical Police Division, Office of Management and Budget, including, but not limited to the following divisions:

a. Division B - Mining

b. Division D - Manufacturing

c. Division E - Transportation, Communications, Electric, Gas and Sanitary Services.

d. Division I - Services A user identified in the Standard Industrial Classification Manual may be excluded from the industrial cost recovery system if it is determined

by the Superintendent that the industry will introduce primarily segregated domestic wastes or wastes from sanitary convenience.

Industrial Wastes shall mean the wastewater from industrial processes, trade, or business and distinguished from domestic or industrial wastes.

Infiltration shall mean the water unintentionally entering the public sewer system, including sanitary building drains and sewers, from the ground through such means as, but not limited to, defective pipes, pipe joints, connections or manhole walls. Infiltration does not include, and is distinguished from, inflow.

Inflow shall mean the water discharge into a sanitary sewer system, including building drains and sewers, from such sources as, but not limited to: roof leaders, cellar, yard and area drains, foundation drains, unpolluted cooling water discharges, drains from springs and swampy areas, manhole covers, cross connections from storm sewers and/or combined sewers, catch basins, storm waters, surface runoff, street wash waters, or drainage. Inflow does not include, and is distinguishable from, infiltration.

Interceptor Sewer shall mean a sewer whose primary purpose is to transport wastewater to a treatment facility.

Local Government shall mean the Town of Boone, Watauga County, North Carolina, acting through its Mayor and Town Councilmembers, or other duly authorized representatives.

Local Government User shall mean one of the following entities, as it relates to each entity's connection to the Water and Sewer system of the Town of Boone, North Carolina: the Town of Boone, North Carolina; Watauga County, North Carolina; the Watauga County Board of Education.

National Pollutant Discharge Elimination Permit shall mean a permit issued under the National Pollutant Discharge Elimination System (NPDES) for discharge of wastewaters to the navigable waters of the United States pursuant to Section 402 of Public Law 92-500, as amended.

Natural Outlet shall mean any outlet, including storm sewers into a watercourse, pond, ditch, lake or other body of surface or ground water.

New Developments or **New Subdivisions** shall refer to any property developed or subdivided after the effective date of this Ordinance. The term developed as it relates to new developments is defined as any new construction relating but not limited to residential, commercial, industrial, public and/or institutional activity.

Normal Domestic Strength Sewage as defined for the purpose of the ordinance, shall mean wastewater having an average daily suspended solids (SS) concentration of not more than two hundred (200) milligrams per liter and an average daily BOD of not more than two hundred (200) milligrams per liter.

Operation and Maintenance Costs shall include all costs, direct and indirect, not including debt service, but inclusive of expenditures attributable to administration, replacement of equipment, and treatment and collection of wastewater collection and treatment on a continuing basis which conforms to applicable regulations and assures optimal long term facility management.

Person shall mean any individual, firm, company, association, society, corporation or group.

pH shall mean the term used to express the intensity of the acid or base condition of a solution, calculated by taking the logarithm of the reciprocal of the hydrogen ion concentration. The concentration is the weight of hydrogen ions in grams per liter of solution.

Pretreatment shall mean the treatment of industrial wastes from privately-owned industrial sources by the generator of that source prior to introduction of the waste effluent into a publicly-owned treatment works.

Private Sewer shall mean a sewer which is not owned by the Town of Boone.

Properly Shredded Garbage shall mean the wastes from the preparation, cooking and dispensing of foods that have been shredded to such a degree that it does not create a problem with equipment and piping apparatus.

Public Sewer shall mean a sewer which is owned and controlled by the Town of Boone, and is separate from and does not include sewers owned by other governmental units.

Rainwater Harvesting and Reuse is the collection, storage and treatment of rain from roofs or from surface catchments that is recycled back into the natural environment for safe allowable non-drinking purposes. The water is generally stored in rainwater tanks or directed into mechanisms which recharge groundwater.

Replacement Costsshall mean the expenditures for obtaining and installing equipment, accessories, or appurtenances necessary during the service life of the treatment works to maintain the capacity and performance for which such works were designed and constructed. The term Operations and Maintenance Costs , as defined above, Item 30 of this ordinance, includes replacement costs.

Residential User for billing purposes shall refer to any residential dwelling with a meter size of one inch (1") or less. It shall not refer to multi-family residential dwellings with common meters.

Sanitary Sewer shall mean a sewer which carries only sanitary or sanitary and industrial wastewaters from residences, commercial buildings, industrial plants, and institutions and to which storm, surface and ground waters are not intentionally admitted.

Slug shall mean any discharge of water or wastewater which in concentration of any given constituent or in quantity of flow exceeds for any period duration longer than fifteen (15) minutes more than five (5) times the average twenty-four (24) hour concentration or flows during normal

operation and shall adversely affect the collection system and/or performance of the wastewater treatment works so as to prevent attainment of effluent limitations or to substantially increase operation and maintenance requirements.

Standard Methods shall mean the laboratory procedures set forth in the following sources: Standard Method for the Examination of Water and Wastewater, 13th edition, as amended, prepared and published jointly by the American Public Health Association, and Water Pollution Control Federation; Methods for Chemical Analysis of Water and Wastes, 1971, prepared and published by the Analytical Quality Control Laboratory, U.S. Environmental Protection Agency;
Guidelines Establishing Test Procedures for the Analysis of Pollutants, enumerated in 40 DFR S 136.1 et seq. (1975), as amended; and/or any other procedures recognized by the U.S. Environmental Protection Agency and the North Carolina Division of Environmental Management.

Storm Sewer shall mean a sewer that carries only stormwaters, surface runoff, street wash, and drainage, and to which sanitary and/or industrial wastes are not intentionally admitted.

Superintendent shall mean the Town Manager of the Town of Boone or any authorized deputy, agent or representative.

Suspended Solids (SS) or **Total Suspended Solids (TSS)** shall mean total suspended matter that either floats on the surface of or is in suspension in water, wastewater or other liquids and is removable by laboratory filtration as prescribed in the Standard Methods.

Toxic shall mean any pollutant or combination of pollutants which upon exposure in sufficient quantity to or assimilation into organism will cause adverse effects such as cancer, genetic mutations, and physiological manifestations as defined in standards issued pursuant to Section 307(a) of Public Law 92-500, as amended.

Unpolluted Water is water of a quality equal to or better than the effluent criteria in effect, or water that is of sufficient quality that it would not be in violation of federal or state water quality standards if such water were discharged into navigable waters of the state. Unpolluted water would not be benefited by discharge to the sanitary sewers and wastewater treatment facilities provided.

Unusual Circumstance case is defined as a situation in which the strict implementation of the water and/or sewer regulations or fees shall defeat the policy or rationale underlying said regulations or fees.

Useful Life shall mean the anticipated term in years of physical and/or functional productivity of elements and/or the whole of the wastewater disposal system which can be reevaluated as a result of preventive maintenance, renewal which offsets physical and/or functional obsolescence, renewal of capital elements due to consumption and physical and/or functional betterments, direct or indirect.

User Charge System shall mean the system of charges levied on users for the cost of operation and maintenance, including replacement reserve requirements on new and old wastewater collection and

treatment facilities.

Wastewater shall mean the combination of the liquid and water-carried wastes from residence, commercial buildings, industrial plants, and institutions, including polluted cooling water and unintentionally admitted infiltration and/or inflow.

a. Sanitary Wastewater shall mean the combination of liquid and water carried wastes discharged from toilets and other sanitary plumbing facilities.

b. Industrial Wastewater shall mean a combination of liquid and water-carried wastes discharged from any industrial establishment and resulting from any trade or process carried on in that establishment and shall include the wastes from pretreatment facilities and polluted cooling water.

Wastewater Disposal System shall mean the structures, equipment and processes required to collect, transport and treat domestic and industrial wastes and to dispose of the effluent and accumulated residual solids.

Section 1-4. Hardship Policy.

A. A financial hardship case shall be defined as an individual and/or family living below the poverty level as defined by the United States Government.

B. The Town Manager shall have the authority to modify or waive the water and sewer regulations and/or fees in unusual circumstances cases when the amount requested to be waived does not exceed $3,000.00. A decision of the Town Manager is final and may not be appealed to the Town Council even if the Town Manager refuses to waive or make any adjustment in the amount in question. However, in cases in which the Town Manager has declined to exercise authority or where the amount a current customer seeks to have waived or modified exceeds $3,000.00, the request shall be referred to the Town Council for action. The Town Council may waive or modify the amount up to a total of $15,000.00 and may authorize repayment of any amount which is not waived in equal installments over a period of up to eight months. For the Town Council to exercise any authority under this section, it must conclude that the cause of the unpaid bill was beyond the control of the customer, that the customer acted expediently in the case of a leak once the existence of the leak was discovered, and that the customer has acted in good faith and with an interest in minimizing any loss of water to the Town's system. In general, neither the Town Manager nor the Town Council should waive any portion of an unpaid amount which has accrued over a period exceeding three billing cycles.

The Director of Public Utilities shall provide the Town Manager with a written report summarizing the unusual circumstances and providing his or her recommendation. In each case in which Town Council approval must be sought, the Director of Public Utilities shall

also provide the Town Council with the report and recommendation.

C. In cases in which the amount sought to be waived is caused by a water leak and the amounts incurred by the customer relate to both water and sewer charges, the Town Manager can also modify and waive the indebtedness relating to the sewer charges without limit if it is determined that none of the water for which the charges are waived actually discharged into or impacted the sewer system.

Section 1-5. Unusual Fact Guidelines.

A. An unusual circumstances case is defined as a situation in which the strict implementation of the water and/or sewer regulations or fees shall defeat the policy or rationale underlying said regulations or fees.

B. The Town Manager shall have the authority to modify or waive the water and sewer regulations and/or fees in unusual circumstances cases when the amount in question does not exceed $3000.00. The Director of Public Utilities shall provide the Town Manager with a written report summarizing the unusual circumstances and providing his or her recommendation.

Section 1-6. Purpose and Intent.

The purpose of these ordinances is to promote the public health, safety, prosperity, aesthetics and general welfare of the citizens of the Town of Boone and is designed to provide the legislative enactments required under Public Law 92-500, as amended, and applicable federal regulations for the acceptance of construction grants to improve the quality of effluent discharges from waste treatment works. It is further intended to provide for administration and enforcement of the ordinance and to provide penalties for its violations.

Section 1-7. Abrogation and Greater Restrictions.

It is not intended by these ordinances to repeal, abrogate, annul, impair, or interfere with any existing easements, covenants, deed restrictions, agreements, rules, regulations, ordinances or permits previously adopted or issued pursuant to law. However, wherever this ordinance imposes greater restrictions, the provisions of this ordinance shall govern.

Section 1-8. Interpretation.

Their interpretation and application, the provisions of these ordinances shall be held to be minimum requirements and shall be liberally construed in favor of the local government and shall not be deemed a limitation or repeal of any other power granted by the statutes of the State of North Carolina.

Section 1-9. Severability of Ordinance Provisions.

If any section, provision, or portion of these ordinances is adjudged unconstitutional or invalid by a court of competent jurisdiction, the remainder of the ordinance shall not be affected thereby.

Section 1-10. Repeal.

All other ordinances or parts of ordinances of the local government inconsistent or conflicting with the ordinance, to the extent of the inconsistency only, are hereby repealed.

Section 1-11 to 1-12. Reserved.

ARTICLE II
WATER SYSTEM STANDARDS

The following shall be used as a standard for design and construction of a water system connected to the Town of Boone system. Failure to follow these standards shall be sufficient grounds for the Town to deny service.

Section 2-1. General Information.

A. Permits and Approvals.

1. The Town shall review and approve all plans prior to submittal to any other reviewing agency (State, Federal or Utility).

2. All approvals by all regulating authorities shall be obtained before any construction is started. Copies of these approvals, including all permits, maps and plans shall be received by the Town before construction begins.

3. Approvals must be obtained from (but not limited to) the North Carolina Department of Human Resources, Division of Health Services (Water), the North Carolina Department of Natural Resources and Community Development, Division of Environmental Management (Sewer and Sedimentation Erosion Control), the North Carolina Department of Transportation (Right-of-Way Encroachment), Railroads and Utilities (Right-of-Way Encroachment) and private property owners (right of way). These shall be obtained in the name of the owner/developer and transferred to the Town or in the Towns name initially. The Town shall incur no expense for permitting.

B. Approval by the Town. Approval by the Town shall be obtained by the following procedures:

1. Submit three (3) sets of plans and one (1) reproducible set of plans with a letter requesting approval of the plans.

2. The Town shall review the plans for conformance with the Towns ordinances and standards. The Town shall make appropriate comments and return the plans. The Town shall return an approved set of plans with a letter of approval when no comments are warranted.

3. Obtain all other approvals, easements and right-of-ways and submit copies to the Town.

4. The Director of Public Utilities shall allow construction to begin when all permits have been received.

C. Construction Records and Inspection.

1. As-built drawings shall be prepared to reflect all changes made during construction. A field survey to locate all new manholes and to determine the inverts of new sewer lines as well as location of all water lines, hydrants, bends and connection points shall be conducted by the owner/developer. As-built drawings shall show locations of all sewer laterals and water services referenced to fixed points so as to be easily located in the event that the markers are destroyed. The method of location on the as-built drawings shall be as directed by the Director of Public Utilities. The owner/developer shall mark the location of sewer lateral ends with a steel post painted yellow extending at least three (3) feet above ground.

2. Construction inspection of water and sewer installations is required per Sections .0903 and .0906 of the rules Governing Public Water Supplies. Construction inspection by a registered professional engineer or a representative of the engineers office, under the engineers supervision, is required. The engineer must submit a statement, acceptable to State Agencies, reflecting that the water and sewer system was constructed in accordance with the approved plans and specifications.

D. Guarantee of the Work. The work shall be guaranteed by the owner/developer for a period of one (1) year. The guarantee shall cover materials and workmanship. Any defective work or materials shall be repaired or replaced, at no expense to the Town.

E. Acceptance of the Facilities by the Town. The Town shall accept new facilities upon completion of the following:

1. All construction is complete and all tests satisfactory.

2. Statement of inspection from Engineer is received.

3. Plan originals with all as-built revisions are received.

4. All permanent easements, right-of-ways and permits in the Towns name and copies filed in the proper offices.

5. All sediment and erosion control structures are removed and site is clear of debris and equipment.

6. Any release required by the Director of Public Utilities.

F. Fire Flow Requirement Determination.

1. In order to provide adequate fire protection to the Town of Boone, the following criteria for determining fire flow requirements shall apply:

a. National Fire Codes.

b. ANSI Standards.

c. Fire Insurance Regulations from the North Carolina Department of Insurance (I.S.O.).

d. AWWA Standards.

e. Boone Fire Department Experience.

f. Practices of the Boone Department of Public Utilities.

2. Water systems owned by or connected to the Towns system shall be so designed and constructed to meet the above requirements.

Section 2-2. Water System Specifications.

A. Installation Specifications.

1. Clearing.

Where the lines are to be constructed in wooded areas, permanent easements shall be fully cleared. Cleared materials shall be disposed of off of the construction site. Disposal shall be made in accordance with all local and state laws. Trees cut down on the construction site will be hauled away from the site for proper disposal. Stumps of all trees cut down outside of the excavation area shall be removed. Ground surfaces shall be graded so as to promote proper drainage and allow mowing by vehicular equipment.

2. Site Grading.

All rough grading shall be completed prior to the installation of the sewers and appurtenances.

3. Earthwork.

a. Explosives and Blasting. Explosives for blasting shall be stored, handled and used in accordance with the North Carolina Department of Transportation Standard Specifications latest revision, all local regulations, and practices outlined in the Blasters Handbook published by E.I. Dupont de Nemours and Company, Inc. Blasting shall be conducted so as not to endanger persons or property, and shall be covered or otherwise satisfactorily confined. The blaster shall be responsible for, and shall make good, any damage of

whatever nature caused by blasting or accidental explosions.

b. The bottom of all excavations shall be free from water when pipe is laid in the excavation, when concrete is placed and until work is carried above the groundwater level and is safe from flotation. If any of the subgrade or underlying materials is disturbed by movement of groundwater, surface water or any other reason, it shall be replaced with crushed stone or gravel.

4. Clean-Up of Site.

At the completion of the work, all debris and excess construction materials shall be removed and the right-of-way shall be left clean and presentable.

5. Materials.

a. Select Backfill.

Select backfill material shall contain no man-made or organic material or clay pockets and shall be free of rocks, clods or other materials larger than two(2) inches in nominal diameter. Materials from on-site excavations may be used for select backfill provided they meet the specific requirements and contain optimum moisture content for proper compaction. Water saturated material shall not be used as select material. If sufficient on-site select backfill material is not available, acceptable material from an off-site borrow area shall be secured.

b. Backfill.

Backfill shall be free of all organic materials and shall not contain any rocks larger than four (4) inches in diameter, or be in a water saturated condition.

c. Crushed Stone or Screened Gravel.

Crushed stone or screened gravel shall meet the requirements of the North Carolina Department of Transportation Standard Specifications (latest revision). Crushed stone or screened gravel shall conform to standard size No. 5. Any rock excavated on site which meets this graduation may be used. Specifically, the stone shall meet the following gradation:

Sieve Size	Percentage Dry Weight Passing Designated Sieve Size
1-1/2 inch	100
1 inch	90 - 100

3/4 inch	20 - 55
1/2 inch	0 - 10
3/8 inch	0 - 5
No. 200	0 - 0.6

d. Pipe Bedding.

All materials used for pipe bedding shall conform to North Carolina Department of Transportation Standard Specifications (latest revision) for standard size 67 material. Any rock, run-of-bank sand, or gravel excavated on site which meets the following gradation may be used.

Sieve Size	Percentage Dry Weight Passing Designated Sieve Size
1 inch	100
3/4 inch	90 - 100
3/8 inch	20 - 55
No. 4	0 - 10
No. 8	0 - 5
No. 200	0 - 0.6

e. Riprap.

The stone for riprap shall consist of field stone or rough unhewn quarry stone. The stone shall be sound, tough, dense and resistant to the action of air and water. The riprap shall be Class I as specified in the NCDOT Standard Specifications (latest revision). The stone shall vary in weight from 5 to 200 pounds. At least thirty (30) percent of the total weight of the riprap shall be in individual pieces weighing a minimum of sixty (60) pounds each. Not more than ten(10) percent of the total weight of the riprap may be in individual pieces weighing less than fifteen (15) pounds.

6. Excavation.

a. General.

All excavation shall be made in such a manner, and to such widths, as will give ample room for properly constructing and inspecting the structures they are to contain, and for such sheeting, timbering, pumping and draining as may be required within the limits shown in Standard NPW-2. Except where otherwise specified, excavation slopes shall be flat enough to avoid slides that will cause disturbance of the subgrade, or damage to adjacent areas. Intercept and collect surface runoff both at the top and bottom of cut slopes.

All excess excavated material and all excavated material which is unsuitable shall be removed from the site and replaced with suitable material.

b. Sheeting and Bracing.

Place and maintain such sheeting and bracing as may be required to support the sides of the excavation or to protect pipes and structures from possible damage, and to provide safe working conditions. The contractor shall be responsible for the adequacy of all sheeting and bracing used, and for all damage resulting from sheeting and bracing failure or from placing, maintaining and removing it. All sheeting and bracing shall be removed upon completion of work. The Town may permit sheeting to be left in place at the request and expense of others for the purpose of preventing injury to structures or property. Any sheeting or bracing left in place shall be cut off at least two (2) feet below the finished ground surface.

c. Rock Excavation.

All rock encountered within the limits of excavation shall be excavated. Rock shall be excavated so that generally there will be a clear space of at least twelve (12) inches from the outside barrel of the pipe to the side of the trench. Isolated points of rock shall not come nearer than six (6) inches to the pipe. At the trench bottom, the rock shall not come nearer than six (6) inches to the pipe. In addition, sufficient rock shall be removed at joints to facilitate proper installation. Rock shall be fully removed at least fifteen (15) feet in advance of the laying of the pipe.

d. Protection of Subgrade for All Excavations.

To minimize the disturbance of the bearing materials and provide a firm foundation:

1. Excavation shall be carried out below subgrade in limited areas, should disturbed soil or material with natural low bearing capacity be encountered. Stabilizing of these areas shall be done with select backfill or coarse aggregate as required. Soils disturbed through the operations shall be excavated and replaced with select backfill or coarse aggregate, as required.

2. Provide positive protection against penetration of frost into materials below the bearing level during work in winter months.

7. Backfilling.

a. Backfill shall be placed in maximum eight (8) inch lits and compacted with tampers to 95 percent of Standard Proctor AASHTO-99 density, except backfill under structures, which shall be compacted to 98 percent of Standard Proctor Density. Backfill in the roadways shall be tamped to NCDOT requirements.

b. Pipe trenches shall be backfilled as soon as possible after pipe installation.

c. Where sheeting is used, use all reasonable measures to prevent the loss of support of the pipe or backfill when the sheeting is removed. If significant volumes of soil cannot be prevented from clinging to the extracted sheets, the voids shall be continuously backfilled as rapidly as possible. Thereafter, limit the depth below subgrade that sheeting will be driven in similar soil conditions or employ other appropriate means to prevent a loss of pipe support. Sheeting embedded in granular fill or backfill materials shall be left in place.

8. Pipe Laying.

Pipe laying shall in all instances be accomplished in a workmanlike manner laid true in line and grade with bell ends facing (up-grade) in the direction of laying. The various pipes shall be handled, belled-up and laid in accordance with manufacturers requirements and good engineering practices.

9. Pipe Bedding.

a. Shaped Bottom Bedding (NPW-1): Shall be so the pipe bears uniformly upon undisturbed native earth. Soil is then backfilled and tamped by hand around the pipe (and completely under the pipe haunches) in uniform layers not exceeding six (6) inches in depth to 10" above the top of pipe. Each 6" layer shall then be placed, then carefully (so as not to disturb or damage the pipe) and uniformly tamped, eliminating the possibility of lateral movement.

b. Type II - Granular Material Embedment (NPW-3): Shall be when the trench bottom is undercut a minimum of six (6) inches below the pipe barrel grade and filled with an approved stone as shown in the standard details.

c. Type III - Granular Material Embedment (NPW-4): Shall be when the trench bottom is undercut a minimum of six (6) inches below the pipe barrel grade and filled with an approved stone to an elevation such that the pipe will be completely and uniformly bedded.

d. Concrete Encasement and Cradles (NPW-5): Shall be as shown in the Standard Details.

10. Installation Limitations.

The following are limitations and bedding requirements for supportive strength and shall be adhered to at all times.

a. 6- and 8-inch Pipe: Installation of 8-inch PVC pipe with more than fourteen (14) feet of cover use Type II, Granular Embedment.

b. 10-inch and 12-inch Pipe: Installation of 10-inch and 12-inch PVC pipe with more than twelve (12) feet of cover, use Type II, Granular Embedment.

c. Ductile Iron Pipe: Installation of Ductile Iron Pipe with more than twenty (20) feet of cover, use Type II, Granular Embedment; more than thirty (30) feet of cover, use Type III, Granular Embedment. This is regardless of ground water and/or soil conditions. In areas having 2.50 feet and less or 18.0 feet and more of cover, use Ductile Iron Pipe.

11. Portland Cement Concrete.

a. Acceptance of Concrete: The Director of Public Utilities shall require all and as many tests as he deems necessary to insure the concrete acceptability. The cost of the test shall be at the suppliers or contractors expense.

b. Depositing: Concrete will not be used if it cannot be placed within ninety (90) minutes of the dispatch time. Concrete shall be deposited in such a manner so as to prevent contamination by foreign material and segregation due to rehandling or flowing. Segregated concrete and/or concrete consisting of foreign material will not be used. Depositing will not be done when temperature has not exceeded 35 degrees Fahrenheit and rising by 10:00 a.m. Concreting shall cease when the descending air temperature in the shade falls below 40 degrees Fahrenheit. It shall not resume until the ascending air temperature rises to 35 degrees Fahrenheit. All concrete shall be kept from freezing. Frozen concrete shall be replaced. Free fall shall not exceed three (3) feet in any case.

c. Forms: Forms may be made of wood, plywood, metal or any other suitable material. Forms shall be mortar tight, of material strong enough to resist noticeable deflection or bulging between supports, and the interior dimensions of the forms shall be such that the finished concrete shall be of the proper form and dimensions. The design of the forms shall take into account the effect of vibration of concrete as it is placed and also the rate of speed at which the forms will be filled. Mechanical vibrators, of an approved type, and continuous spading and/or rodding of concrete shall be used to produce proper contact of concrete with forms and reinforcing steel in piers

and with forms and pipe in monolithic inverts insuring a compact, dense and impervious artificial stone of uniform texture.

d. Curing: All concrete shall be cured by one of the following methods:

1. Forms left in place for a period of seven (7) days. Exposed concrete shall be moist cured.

2. Moist curing performed when forms are removed before seven (7) days. All construction joints shall be moist cured.

3. Curing compound used immediately after forms are removed and all surface water has disappeared.

e. Finishing: The structure shall have a uniform and textured surface. All form marks exposed to view shall be rubbed off with a stone.

12. Testing.

Testing is required on all lines and shall be done in the presence of the Director of Public Utilities or his representative. A minimum of 48 hours notice shall be given to the Director of Public Utilities before testing begins unless other schedules can be arranged. All testing and disinfection shall be completed prior to connection to any existing line.

a. Water Line Testing.

Hydrostatic and Leakage Tests: On completion of the line or sections of the lines, connections and appurtenances, the line shall be filled and hydrostatically tested. The water for this purpose can be taken from existing lines under the supervision of the Public Utilities Department; the pressure shall be increased to either 150 psi or 200 psi at the lowest point in the section being tested as specified by the Director of Public Utilities. Testing shall be for a minimum of four (4) hours to a maximum of 24 hours. The water added during the testing will be metered. All leaks and any defective material shall be repaired or replaced to the satisfaction of the Director of Public Utilities and the tests repeated until the requirements of this specification are met. Leakage will be allowed on the basis of the formula set forth in AWWA Specification C-600.

b. Field Testing Valves: In addition to manufacturer testing and certification, field tests of all valves as directed by AWWA Specifications C-500 and C-504 as applicable.

1. During the last stages of the test and without any reduction in pressure, first the hydrant valves will be closed, then progressing in an orderly manner from the end opposite from the test pump each main line valve will be closed and pressure released to determine if it is holding pressure (minimum 30 minutes).

2. Unless otherwise directed by the Director of Public Utilities, all Butterfly Valves will be tested to 150 psi for a minimum of 30 minutes (each) after the pipeline has been successfully tested.

13. Disinfection of Mains.

All water mains shall be thoroughly flushed and disinfected before being placed in service. This work shall be done under the direct supervision of the Director of Public Utilities. After a thorough flushing and cleaning out, sufficient chlorine concentration of at least 50 parts per million. The chlorine solution shall be retained in the lines for at least twenty-four (24) hours. At the ends of this period, the chlorine residual shall be at least 10 parts per million. The lines will then be flushed sufficiently to clear them of chlorine exceeding one part per million. Samples of water from the mains will then be taken and analyzed for bacteriological purity. If the mains fail to meet the bacteriological standard for purity, then disinfecting and flushing will be repeated until such standards have been met. All analysis for chlorine and bacteriological purity will be by Town personnel.

14. Drainage of Mains.

a. Mains shall be drained through hydrants or blowoffs to natural drains. Drainage of mains will be accomplished in such a manner as to minimize erosion and siltation to adjoining properties. Water velocity from drainage and/or blow-off will also be dissipated in an acceptable manner to protect the environment.

b. Hydrants or blowoffs shall not be connected to any sewer, submerged in any streams, or installed in any other manner that will permit back siphonage into the distribution system.

15. Water Use.

All water used for testing, flushing, disinfection, etc. shall be purchased from the Town at prevailing rates. The use of water (time and quantity) shall be coordinated with the Director of Public Utilities. This coordination shall be accomplished by submittal of a proposed schedule of water use for approval by the Director of Public Utilities. The proposed schedule should be submitted ten(10) working days prior to any water use.

16. Final Grading and Landscaping.

a. General.

Fertilizing, seeding and mulching of any and all areas disturbed during construction will follow within ten (10) working days of the installation of each pipe run (being from manhole to manhole or 300 feet of water line). All plantings shall be maintained by the installer for a period of one (1) year after the completion of the work.

b. Materials.

Lawn fertilizer shall be a complete fertilizer with components derived from organic sources and shall contain the following percentages by weight:Type 10-10-10 10% Nitrogen (Ureaform) 10% Phosphoric Acid10% Potash. One quarter of the nitrogen shall be in the form of nitrates, one quarter in the form of ammonia salts, and one half in the form of natural organic nitrogen. Available phosphoric acid to be free from superphosphate, bone, or tankage. Potash shall be sulphate or potash. Elements shall conform to the standards of the Association of Official Chemists.

1. Storage - Commercial fertilizer shall be stored in weatherproof storage areas and in such a manner that effectiveness will not be impaired.

2. Ground Limestone - At least fifty (50%) percent shall pass a No. 200 U.S.S. mesh sieve. At least ninety (90%) percent shall pass a No. 100 U.S.S. mesh sieve. One hundred percent (100%) shall pass a No. 10 U.S.S. mesh sieve. Total carbonates shall not be less than eighty (80%) percent of 44.8% Calcium Oxide equivalent; for purposes of calculation, total carbonates shall be considered as Calcium Carbonate.

3. Grass Seed - Grass seed shall be New Crop mechanically mixed seeds in the following seed mixture proportions:

% Mixture	Seed Variety	%Purity	%Germination
80	Kentucky 31	98	97
20	Kentucky Bluegrass	98	85

c. Seed Bed Preparation.

The seed bed shall be prepared by pulverizing the soil to a depth of three (3)

inches. Good surface drainage must be provided, allowances for settlement made and ground elevations adjusted accordingly. Visible ponding will not be allowed. All stones, roots, sticks, rubbish and other objectionable material shall be removed.

d. Soil Improvements.

Soil additives shall be applied incorporated in an approved manner into the topsoil at the following rates:

1. Fertilizer - 30 lbs. per 1000 square feet of 10-10-10 fertilizer.

2. Lime - 100 lbs. per 100 square feet.

3. Superphosphate (0.20.0) - 12 lbs. per 1000 square feet.

e. Seeding.

The seed bed must be in good, friable condition and has not become muddy or hard at the time seeding is to be performed. Seed shall be applied at the rate of 8 lbs./1000 square feet and raked or tilled into the topsoil with the resulting furroughs running across the natural slope of the ground.

f. Mulching.

1. Dried straw shall be uniformly spread (approximately 1/4 of the ground should remain visible to avoid smothering seedlings) over the area at the rate of 90 lbs. per 1000 square feet. The straw shall be sprayed with liquid asphalt to bond it together and anchor it in place.

2. Liquid asphalt (thinned with kerosene) used during freezing weather shall be either rapid or medium curing, applied at a rate of 200 gallons per ton of straw (approximately 9 gallons per 1000 square feet).

3. Emulsified asphalt (thinned with water) used when temperatures are less severe shall be rapid curing only, applied at a rate of 150 gallons per ton of straw (approximately 7 gallons per 1000 square feet).

g. Maintenance.

Maintenance shall consist of watering, weed and pest control (within established lawns), fertilization, erosion repair, reseeding and all else necessary to establish a vigorous health and uniform stand of grass. All areas

and spots which do not show a uniform stand of grass, for any reason, shall be treated repeatedly until a uniform stand is attained.

17. Erosion and Sedimentation Control Measures.

    a. All work shall be done in accordance with and subject to the limitations of the N.C. Rules and Regulations for Erosion and Sediment Control.

    b. It shall be the responsibility of the installer of the system to obtain approval of a sedimentation and erosion control plan from the N.C. Department of Natural Resources and Community Development prior to land disturbing activities.

    c. All erosion control measures shall be maintained until no longer required for sediment control, at which time they shall be dismantled and removed from site.

B. Ductile Iron Pipe.

1. All ductile iron pipe shall be Class 50, 51 or 52 designed in accordance with AWWA Standard C-150. Design shall be done for external and internal pressures separately, using the larger of the two for the next design thickness. An additional allowance shall be made for corrosion and casting tolerances. The thickness design for external and internal pressures shall use the following conditions:

    a. 3' minimum cover and maximum cover as shown on the plans;

    b. Laying condition - Type 1;

    c. A minimum working pressure of 150 psi;

    d. A surge pressure of an additional 100 psi.

2. The minimum class thickness shall be Class 50.

3. The ductile iron pipe shall be manufactured in accordance with all applicable requirements of AWWA Standard C-151. The ductile iron pipe shall be supplied in nominal lengths of 18 or 20 feet.

4. The ductile iron pipe shall be cement-mortar lined with a sealcoat in accordance with AWWA C-104, and bituminous coated in accordance with AWWA C-151.

5. Pipe joints shall be mechanical or push-on manufactured in accordance with AWWA Standard C-111.

6. Each joint of ductile iron pipe shall be hydrostatically tested of 500 psi at the point of manufacture before the outside coating and inside lining are applied. Testing may be performed prior to machining bell and spigot. Failure of ductile iron pipe shall be defined as any rupture or leakage of the pipe wall.

7. All materials used in the production of the pipe are to be tested in accordance with AWWA Standard C-151 for their adequacy within the design of the pipe, and certified test results are to be provided to the City upon request. All certified tests, hydrostatic and material, are to be performed by an independent testing laboratory at the expense of the pipe manufacturer.

8. Push-on and mechanical joint pipe shall be as manufactured by the American Cast Iron Pipe Company, United States Pipe and Foundry Company, Griffin Pipe Products Company, McWane Case Iron Pipe Company.

9. Restrained joints shall be TR Flex or Lok Tyte as manufactured by U.S. Pipe, Lok-Fast or Lok-Ring as manufactured by American Pipe or Super-Lock as manufactured by Clow. Restrained joints shall be used when the pipe location excludes the use of thrust blocks for proper support.

C. Ductile Iron or Cast Iron Fittings.

1. All fittings shall be manufactured in accordance with AWWA C-110 or C-153 for standard fittings and ductile iron compact fittings, respectively. The fittings shall be tested and the manufacturer shall provide certified test results when requested by the Town. This testing shall include hydrostatic proof testing of the fittings.

2. All fittings shall be all-bell and of the mechanical joint type. Mechanical joints shall be manufactured in accordance with AWWA Standard C-111.

3. All fittings shall be cast iron or ductile iron and shall have a minimum working pressure rating of 250 psi and a minimum iron strength of 25,000 psi.

4. All fitting interiors shall be cement-mortar lined in accordance with AWWA Standard C-104, and the outside shall be bituminous coated.

D. Polyvinyl Chloride Pipe (PVC) and Fittings.

1. All PVC pipe is to be in accordance with ASTM D2241. PVC material shall conform to ASTM D1784. Pipe shall have push-on joints with integral bell and locked in gasket and shall conform to ASTM D3139. The bell shall consist of an integral wall section with a locked-in, solid cross section elastomeric ring which meets the requirements of ASTM F-477. Pipe will also be the type approved by the National Sanitation Foundation and shall bear the NSF logo.

2. All pipe for 6-inch and larger mains shall conform to AWWA Standard C-900, DR 14, Class 200, rated with a working pressure of 200 psi. All fittings shall be mechanical joint cast iron as specified above.

3. PVC pipe will be used only in areas where the highest working pressure is 125 psi or less. Ductile iron pipe will be required in all locations where the working pressure exceeds 125 psi as measured or calculated.

4. All pipes and materials are to be tested according to the requirements of AWWA Standard C-900. Certified test results are to be provided to the Town when requested. These tests shall be performed by an independent testing laboratory at the expense of the pipe manufacturer.

E. Gate Valves.

1. All gate valves, including tapping valves, shall be Mueller, M & H, Kennedy or equal in accordance with AWWA C-500 specifications.

2. Gate valves twelve (12) inches in diameter and smaller shall be mechanical joint or hub-end all-bell. They shall be O ring, open-left valves or the non-rising stem type. These valves shall be designed for a minimum of 175 psi working pressure and 300 psi hydrostatic test pressure with a two (2) inch operating nut. Valves shall be cast iron or ductile iron.

3. Tapping valves shall be manufactured in accordance with AWWA specifications. They shall be of the Mueller, M & H, Kennedy, or American O ring, open-left type.

F. Air Release Valves. Air release valves shall be two (2) inch Crispin Pressure Air Valves, Model P20, with a vacuum check unit, two (2) inch Val-Matic, Model VM-45, with a vacuum check unit or equal as approved by the Director of Public Utilities. These valves shall be suitable for 150 psi working pressure and designed to allow air to escape automatically while the main is in service and under pressure. The valve shall be housed in an approved eccentric manhole and shall be installed in accordance with the Standard Detail of these specifications. Air release valve locations shall be approved by the Director of Public Utilities, and shown on the plans.

G. Tapping Sleeves and Tapping Saddles.

1. Tapping sleeves shall be Mueller mechanical joint Mueller Outlet Seal, Ford Stainless Tapping Sleeve Type 304, American Uniseal or Kennedy Square Seal. All sleeves shall have a minimum of 150 psi working pressure. All sleeves larger than twelve (12) inches shall be ductile iron. All taps shall be machine drilled; no burned taps will be allowed.

2. Tapping saddles may be used on mains sixteen (16) inches and larger. Tapping saddles shall be manufactured of ductile iron providing a factor of safety of 2.5 at a working pressure of 250 psi. Saddles shall be equipped with a standard AWWA C-110 flange connection on the branch. Sealing gaskets shall be O ring type, high quality molded rubber having an approximate seventy durometer hardness, placed into a groove on the curved surface of the tapping saddle. Straps shall be of alloy steel. The American tapping saddle, U.S. Pipe ductile non-tapping saddle, or an approved equal shall be used. All taps shall be machine cut; no burned taps will be allowed. Saddles may be used for taps one-half the size of the main or less (ie., 8-inch tapping saddle for use on a 16-inch main). Sleeves shall be used on taps over one-half the size of the main.

H. Valve Boxes. Adjustable valve boxes shall be gray cast iron of the dimensions specified in the Standard Details of these specifications. The word Water shall be cast into the lid. The valve box shall be Dewey Brothers or approved equal.

I. Fire Hydrants.

1. Fire hydrants shall comply with AWWA C-502 as manufactured for the Town of Boone by Kennedy Guardian M & H Model 129, or Mueller A421 Centurion. The Centurion shall include a center punch mark on the lower stem for identification and inclusion of a vertical shoe for a 4-1/2 inch valve opening. Nozzles shall have National standard threads and shall consist of the following: two 2-1/2 inch nozzles and one 4-1/2 inch nozzle. All nozzles shall be provided with cap and cap retaining chain. The hydrant valve opening shall be four and one-half inches. Bronze to bronze threads shall be provided between the hydrant seat or seat ring and the seat attaching assembly. All hydrants must include cast or ductile epoxy lined shoe, rubber drain seals and positive, protective valve stop device.

2. Hydrants shall be open-left type and shall have a six-inch hub-end or mechanical joint elbow. The hydrant barrel shall be of sufficient length to provide a minimum of three feet bury and be of the break-away impact type.

J. Taps.

1. Taps 1" diameter and smaller may be made directly into ductile iron pipe with a corporation stop. For taps 2" diameter or less into PVC and taps greater than 1" but less than 2" in ductile iron, saddles and corporation stops shall be used.

2. Corporation stops shall be as manufactured by Ford or approved equal, having AWWA standard tapered threads. Unions shall be three piece, copper to copper.

3. Service saddles shall be all bronze with double straps and neoprene O ring gaskets attached to the body. The clamp shall have corporation stop threads and be Mueller

Series H16100 or approved equal.

4. Taps larger than 2" or greater than 1/2" the diameter of the main line shall be made using the appropriate size tapping sleeve and valve. On a dry line , the connection shall be made with a tee and valve with brass nipple between tee and valve.

5. The Town shall make all taps to existing lines unless otherwise specifically authorized by the Director of Public Utilities. In the event the Town does not make the tap, the Director of Public Utilities shall be notified 48 hours before any wet line is tapped.

6. Lines. Service lines shall be a minimum of 3/4". Lines 3/4" to 1" shall be type K soft copper or red brass pipe. Fittings shall be flared copper type brass fittings. Lines greater than 1" up to 2" in diameter shall be type K copper, red brass pipe or PVC Standard ASTM D2241 SDR 21 Class 200 PSI (gasket type). Service lines greater than 2" shall be ductile iron pipe or PVC (gasket type) with cast or ductile iron fittings.

K. Meter Setters and Boxes.

1. Residential meter boxes and copper setters shall be purchased from the Town. Copper setters shall be Ford or equal. Copper setters shall be installed with locked ings on the Town side of the meter and with check valves.

2. Meter boxes shall be Dewey Brothers or approved equal.

3. Commercial and industrial meters shall be of a size and configuration approved by the Town. All meters over 1" shall have a bypass with a lockable valve. Meter by-pass lines for fire protection shall have a detector check, or if the by-pass line is to be used for purposes other than emergency fire protection, a meter shall be installed.

4. The Town shall provide and install all meters at owners expense.

L. Multiple Meter Assemblies. The use of multiple meter assemblies must be approved by the Director of Public Utilities. When allowed, meter assemblies shall be as shown in the standard details. All piping shall be provided with unions for easy disassembly. All pipe shall be of the same quality as used for individual meters. Boxes and setters shall be purchased from the Town. Meters shall be purchased from the Town and set by the Town.

M. Backflow Preventers.

1. Meters 3/4" and smaller shall be supplied with integral backflow preventers, supplied by the Town.

2. For meter services larger than 3/4" and up through 2", reduced pressure type backflow preventer, Model FRP as manufactured by Beeco, or approved equal, installed in a separate meter box on the customers side of the meter shall be furnished and installed by the customer.

3. For meter services larger than two (2) inches, reduced pressure type backflow preventers, Model 6CM as manufactured by Beeco or approved equal, shall be installed by the customer in a separate vault on the customers side of the meter.

4. All backflow preventers shall meet approval of the U.S.C. Cross Connection Control Lab.

5. All lines, including fire lines and irrigation lines, shall have approved backflow preventers.

N. Water System Design Criteria.

1. Minimum main line pipe size shall be six (6) inches.

2. Minimum pressure in system shall be 20 psi at peak demand (fire flow).

3. Minimize dead ends, and where they must occur, provide a fire hydrant per standard detail NPW-12. The fitting required at a dead end line shall be determined by the Director of Public Utilities.

4. Minimum cover shall be three (3) feet.

5. Install valves as follows: three at cross; two at a tee; one on a single hydrant branch.

6. Install valves on loops so a maximum of 600 feet can be taken from service without affecting other areas.

7. Separate water lines ten (10) feet horizontal distance from sewer lines (existing or proposed) or keep water line 18 inches clear above sewer line. Where 18 inches clear vertically cannot be maintained below or above the sewer line, both lines shall be mechanical joint ductile iron a minimum of ten (10) feet on either side of the crossing. Center the crossing at the center of the pipe, both lines.

8. Maximum spacing between fire hydrants shall be 500 feet (250 radius).

9. Backflow preventers shall be supplied for every service connection. For services up to 3/4" it shall be integral with the meter, for services larger than 3/4" up to 2" in a separate meter box and for backflow preventers larger than two inches, a vault shall be provided.

10. Vaults shall have aluminum hatch doors with lift assist and shall be capable of withstanding expected traffic loads.

11. All bypasses, other than those with locking valves, shall have detector check valves installed.

12. Reduced pressure principle backflow preventers are to be installed on all lines to installations involving wet manufacturing processes, sprinkler systems or any other hazardous location as determined by the Director of Public Utilities.

13. Water line drawings and specifications shall bear the seal of a registered professional engineer licensed to practice in North Carolina and the installation of the system shall be inspected and certified by the engineer in accordance with N.C.A.C.IOD.0903.

14. Water lines shall have a 25' permanent easement (12.5' each side of center line) in the Towns name. A 50' temporary construction (25' each side of center line, unless directed otherwise) easement shall be provided.

O. Water Plans Checklist. Water line plans should, at the minimum, show the following information:

1. Location and dimension of all existing and proposed street and sanitary sewer rights-of-way.

2. Sanitary sewer and storm drain systems dotted in.

3. Invert of storm drains at crossings, storm drains closely paralleled by water lines.

4. Invert of sanitary sewers at crossings and at upstream and downstream manholes.

5. Size, lengths (or stationary) and types of lines (water, storm, sanitary).

6. All tees, gate valves, fire hydrants and blow offs properly labeled.

7. Legend of symbols.

8. North arrow.

9. Street names.

10. Location(s) of nearest existing valves.

11. Existing pavement, and if applicable, width and length of cut.

12. Include "General Notes" on all plans.

13. Registered Engineers seal and signature.

14. Vicinity map, showing location of lines and a visual plan page index.

P. Water lines - General Notes.

1. Concrete blocking (3000 psi) to be placed at all bends or as required.

2. Standard depth of cover to be three (3) feet except at valve or hydrant locations or other special situations. Cover is based on elevation below edge of pavement or as indicated on the plans.

3. Provide concrete pads (30" x 30" x 6") at all valve boxes.

4. Extensions for valve boxes, when required, are to be 5" soil pipe.

5. All pavement cuts, concrete or asphalt, are to be replaced according to the standard details of the NC Department of Transportation.

6. Pavement cuts are to be replaced immediately after backfilling of initial cut either with permanent replacement or a temporary replacement of 1-1/2" of I-2 or 4" of H-Binder.

7. Repairs to main breaks:
   a. Bell clamps will not be allowed, except in special situations and as directed by the Director of Public Utilities.

   b. Solid sleeves to be used for connecting spigot ends shall be of the long pattern type.

8. In any instance where it will be necessary to have the water shut off on existing mains in order to make a tie-in, the work must be done under the direct supervision of the Director of Public Utilities, and at the time least inconvenient to the water customers involved.

9. When a water main crosses an existing sewer main, the contractor is to replace the sewer pipe spanning the ditch with ductile pipe when the following conditions occur:

   a. Anytime a water main is installed under a sewer main.

   b. When a water main is over a sewer main and the vertical distance between the two mains is 18" or less.

10. Water mains shall be installed with a minimum of 10 (ten) feet horizontal separation from sewer lines. Where this is not possible, as determined by the Director of Public Utilities, both the water line and the sewer line shall be ductile iron pipe.

11. Water lines shall be disinfected and hydrostatically tested in accordance with all State and Town of Boone requirements.

Section 2-3. Underground Packaged Water Booster Pumping Station.

A. Scope of Work.

1. The Contractor shall furnish and install one (1) factory built, underground water booster pumping station, with all the necessary piping, controls and appurtenances as shown on the plans and as specified herein. The station shall be complete with all necessary equipment installed in a fabricated steel capsule. Entrance to the equipment capsule will be gained through a rectangular entrance hatch, with an access ladder provided. The booster station shall be as manufactured by Engineered Fluid, Inc., Centralia, Illinois.

2. The manufacturer of this equipment shall be one recognized and established in the design and production of water booster pumping stations. The booster station manufacturer shall maintain regular production facilities at their place of business. These facilities shall be open for inspection by a representative of the owner at any time during construction and testing of this equipment. Equipment manufactured by a fabricator independent of the firm of record on the equipment submittal will not be allowed.

3. Where a Developer intends to provide other than the specified equipment, the alternate material or equipment must be approved by the engineer prior to the bid. In order for the alternate equipment to be considered an approved equal , prospective suppliers must make a pre-bid submittal as detailed in the following paragraph and make it available to the Director of Public Utilities fourteen (14) days prior to the time of bidding. A list of approved equal material or alternate suppliers will be forthcoming from the engineer five (5) days before bids are taken.

4. Pre-bid submittals for approval will be bound and in three (3) copies. The submittals will contain a minimum of two (2) full size drawings, one (1) each covering the booster pump station and the electrical control schematic. The booster station drawing shall illustrate at least three (3) different views, be to scale and specific to this project. The submittal booklets will be complete with standard size cut sheets covering all individual items that make up the booster pump station and the UL file number under which the manufacturer is listed.

5. The submittals for approval must contain an installation list of only like equipment.

The installation list will be complete with the date of installation, the name and telephone number of the equipment operator and/or the name and telephone number of the design engineer.

B. Equipment Capsule.

1. General.

a. The plate steel employed throughout the equipment capsule shall meet or exceed the requirements for ASTM - 283, Grade D. The structurals shall meet or exceed the requirements for A-36. The design of all members shall be in accordance with the recommended practice for design as specified in the MANUAL OF STEEL CONSTRUCTION, published by the American Institute of Steel Construction, Inc.

b. The equipment capsule shall be one completed unit when delivered. Field welding to complete the structure or attach the entrance tube will not be allowed. Steel plate or 1/4 inch minimum thickness will be used throughout the equipment capsule walls, top and bottom. Layout dimensions shown are for illustrative purposes are not intended to limit an innovative design.

c. The plate forming the top and bottom of the equipment capsule will be knuckle radiused prior to assembly so as to form a lap joint with the wall. The average lap dimension will be 1-1/2 inches measured center of the internal weld to the center of the exterior continuously welded on the interior by hand and the exterior by machine to form an airtight seal.

d. All equipment capsule joints shall be welded both inside and outside. Any ferrous metal device passing through the equipment capsule wall will be welded fully along its circumference or length on both sides of the capsule wall.

e. Non-ferrous, PVC, cast iron or ductile iron piping passing through the equipment capsule wall will be housed in a suitable ferrous metal wall sleeve. The sleeve will be fully welded as described herein. The wall sleeve will be complete with two (2) each mechanical type joints each with adjustable glands and gaskets, both inside and outside of the equipment capsule. The piping passing through the capsule wall sleeve will be sealed tightly to assure completion of the quality control air tests as stated below.

f. The equipment capsule after installation of all components and completion of all penetrations shall be subject to an air test to assure the watertight integrity of the weld system. A test pressure of 3 psi shall be maintained while a soap solution is applied to all welded joints on the exterior of the equipment capsule. The test pressure hall be measured by means of a tested and properly calibrated pressure gauge. Openings in the capsule shall be sealed against leakage.

g. All welds found to be defective shall be repaired and the capsule shall be retested. Six certified copies of the report covering each test shall be prepared by the Contractor and delivered to the Engineer not less than ten (10) days prior to shipment of the package pumping station, at the engineers request.

h. The equipment capsule shall be a vertical, elliptical capsule and have an end diameter of 8 feet and 6 inches, tangent wall length of 8 feet and 6 inches and an inside clear height of 7 feet 3 inches. The tangent wall will be reinforced on the exterior only, on a maximum of 27 inch centers each way. The vertical reinforcement can be either 3 inch channels or 3 inch by 2 inch box beams capped at the ends or a combination of both shapes. The horizontal reinforcement will be 3 inch by 2 inch angles.

i. Four (4) lifting plates of 3/8 inch minimum thickness shall be placed about the perimeter of the equipment capsule to facilitate the lifting and handling of the station. These lifting plates shall be so located as to insure proper balance of the entire pumping station during the setting operation.

j. The equipment capsule entrance manway shall be Bilco Model MNB-50 prefabricated metal roof scuttle, rectangular in shape with a minimum clear inside opening of thirty (30) inches by fifty-four (54) inches. The scuttle cover shall be made of 11 gauge aluminum on the exterior with a three (3) inch beaded, vertical flange, neatly welded and sized to cover the scuttle riser section. The scuttle cover shall be insulated with a minimum of one (1) inch fiberglass insulation, covered and protected by an 18 gauge aluminum liner. The scuttle riser section shall be formed with an integral 3-1/2 inch flange with holes provided for securing the entrance manway to the angle framing on the top of the equipment capsule. The scuttle riser shall be provided with an integral metal cap-flashing of the same gauge and material as the riser, full welded at the corners for absolute weathertightness.

k. The scuttle shall be completely assembled with heavy pintle hinges, compression spring operators, enclosed in telescopic tubes and a full perimeter, extruded rubber draft seal. The cover shall be equipped with an automatic hold open arm complete with red vinyl grip handle to permit easy, one hand release. When the scuttle cover is in the open position, the hold open arm will engage a lock-open device to prevent accidental closing of the scuttle cover. All entrance manway hardware shall be zinc plated with the exception of the entrance lock which shall be brass.

l. The entrance manway shall be connected to the top of the equipment capsule by an attachment system. Neither factory nor field welding of the entrance manway will be permitted. The attachment system shall include but not be limited to ten (10) 3/8" diameter flange bolts with nuts and two (2) flat washers each, bedding compound sealant, 4504 Scotch polyfoam, single side adhesive coated 1/4" by 3" gasket material and four (4) each 2" by 1-1/2" by 1/8" flange reinforcement cap angles.

m. The entrance manway attachment system shall whenever possible be factory installed. If because of shipping restrictions the entrance manway cannot be factory installed, field attachment is permitted only if performed by factory personnel.

n. The entrance manway shall be provided with keyed entry. The entry lock shall be flush mounted,in the scuttle riser, in position to be protected from the elements by the cover skirt. The lock will be of the pin tumbler type, dead bolt, with an inside safety release. Two (2) keys will be provided, on a key ring complete with the manufacturers identification.

o. Data sheets detailing the entrance manway and the attachment system are to be included in the manufacturers equipment submittal.

p. An all aluminum access ladder will be provided. The ladder will meet UL and OSHA approval under the Type I, Heavy Duty Specifications. The ladder will have 1-1/4" diameter, tempered, serrated rungs with 3" by 1-1/8" full I-Beam side rails. The uppermost ends of the side rails will be protected by plastic caps bolted into place. The complete access ladder will be bolted into place, at a minimum of two (2) points both top and bottom, so as to be easily removable to facilitate equipment maintenance.

q. The equipment capsule will be complete with a sump to accommodate the automatic sump pump specified elsewhere herein. The sump shall be a minimum of twelve (12) inches in diameter by eight (8) inches deep and shall be fabricated of plate one-fourth (1/4) inch minimum thickness. The sump shall be located so as to insure proper and complete drainage of the equipment capsule floor.

r. The equipment capsule walkway shall be covered with a Nyracord industrial safety matting. The mat shall be a heavy duty, 1/2" minimum thickness Nyracord compound (rubber blend with fiber reinforcement) of open slot design with a ribbed safety pattern (ribbed in two (2) directions) to promote sure footing. The underside of the safety mat shall also be ribbed (in one (1) direction only) to permit aeration and drainage. The safety mat shall not be glued to the floor surface.

2. Corrosion Protection.

a. After all welding is entirely completed, all surfaces of the entire structure shall be sandblasted to a bright metal appearance, equal to commercial blast cleaning (SSPC-SP6), including a removal of all rust, mil scale and other foreign or interference materials and then thoroughly wiped clean with a dry, clean cloth prior to the application of the protective coating system.

b. The protective coating shall take place immediately after surface preparation. The protective coating shall be Tnemec Series 66 Hi-Build Epoxoline two (2) component,

high solids, amide-cured epoxy system formulated for high build application having excellent chemical and corrosion resistant properties. The epoxy system shall be self priming and require no intermediate coatings. The protective coating shall provide in two (2) applications a high film build over welds, joints, bolts and sharp angles. The protective coating shall be applied at a wet film mil thickness of no less than 6.0 mils per application to assure a dry film yield of no less than 4.0 mils per application, with a total dry mil thickness of 8.0 mils.

c. The station manufacturer shall furnish four (4) seventeen (17) pound packaged magnesium anodes for cathodic protection. The anodes shall be buried equally spaced around the station and connected by heavy copper wire to lugs on the station provided for that purpose.

C. Booster Pump System.

1. General.

a. The booster pumps employed within the packaged water booster pumping station shall meet the hydraulic and driver data as set forth in the specification section titled, OPERATING CONDITIONS. The booster pumps must be installed prior to the station delivery. The installation of the booster pumps shall be as shown on the plans covering this project.

b. Prior to acceptance of an equipment proposal covering the packaged water booster pumping station, detailed data shall be furnished by the engineer or the owner and shall include the following booster pump information:

1. Performance Curve showing expected performance at points other than the design conditions. Curve shall show head, capacity, efficiency, and horsepower based on performance and shall cover the complete operating range of the pump from zero capacity to the maximum capacity. The curve is to also include a net positive suction head required curve.

2. Drawings of the proposed equipment giving general dimensions sufficient to determine how the equipment is to be supported and if it will fit within the space available.

2. Operating Conditions. The pump station shall be capable of delivering the fluid medium at the following capacities and heads when operating at 0 feet minimum suction pressure. Pumps 1 and 2 shall be designed to deliver adequate domestic flow to all areas of the subdivision or development. Pump 3 shall deliver adequate fire flow to all areas of the subdivision or development. The pump driver shall be of the type as specified for Pumps 1 and 2 and shall be 15 h.p., 1750 rpm and suitable for 3 phase, 60 cycle, 460 volt electrical service.

3. Horizontal End Suction, Centrifugal Type. The booster pump shall be of the horizontal end suction, centrifugal type. The pumps shall be of close grain cast iron construction complete with bronze trim.

a. Casing. Volute type, bolted to adapter, with recessed lock fit to insure alignment. Discharge nozzle can be swivelled to any one of three positions. Separate suction cover bolted to casing through machined lock joint. No stud or bolt holes are tapped through casing to liquid ways. Tapping openings shall be provided for priming, venting, draining and suction and discharge gauge connections. Piping connection to be as shown on plans and as per pump data sheets, NPT threaded nozzles integral with casing or 125 lbs. ANSI flat face standard drilled flanges.

b. Impeller. Enclosed, single suction type, cast in one piece. All impellers are to be statically balanced to insure smooth operation, also hydraulically balanced except in some small sizes where end thrust is but a minor factor. Impeller is mounted directly on the extended motor shaft, is keyed to shaft and held in lateral position between shaft sleeve and impeller washer. A self-locking cap nut will hold a compression seal washer securely against hub and prevent leakage or liquid between shaft sleeve and shaft.

c. Wearing Rings. Renewable type; maintain proper running clearance with impeller hubs to minimize leakage between suction and discharge.

d. Shaft Sleeves. To be shouldered on shaft near impeller and covers full length of shaft from impeller hub to motor end bracket. Seals by compression between shaft sleeve and impeller hub, also between sleeve and shoulder on shaft, protecting shaft from contact with liquid. Shaft sleeve is free to expand or contract with temperature changes.

e. Stuffing Box.

1. The stuffing box shall be cast integral with the pump casing and will be complete with tapped openings for sealed liquid or a flushing connection. The stuffing box shall be suitable for conversion to use standard packing. The stuffing box hardware shall be non-corrosive.

2. The stuffing box shall contain a face type mechanical seal. The seal shall have a carbon rotating head against a Ni-Resist stationary face and be complete with a Buna-N boot with stainless steel spring and spring retainer.

f. Adapter. Maintains rigid assembly between motor and casing. Machined lock between adapter and motor end bracket keeps adapter and casing in permanent alignment with motor and extended motor shaft. Sides of adapter are fully open for ready access to stuffing box and gland.

g. Motor. Assembled as integral part of the complete units. End bracket is machined to match recessed lock fit on adapter to insure permanent alignment. Shaft carries impeller and sleeve. Motor bearings are ball bearing type, designed to carry all radial and thrust loads, and are installed in sealed housings which retain lubricant and exclude dirt and moisture. Motors are drip protected type, having splash proof bracket on outboard end.

D. Piping.

1. General.

a. All internal transmission piping shall conform to A.S.T.M. A-53 (CW) for nominal pipe size 4 inch and smaller and A.S.T.M. A-53 (ERW) Grade B for nominal pipe size 5 inch and larger. Butt welded fittings shall conform to A.S.T.M. A-106. Forged steel flanges shall conform to A.S.T.M. specification A-181, Grade 1 and ASA B16.5.

Size 10 inch and below - Schedule 40

Size 12 inch and above - Standard weight (.375" wall)

b. The piping configuration shown is for illustrative purposes, however, the piping sizes below are the minimum allowable:

1. Suction Inlet	8"
2. Suction Header	8"
3. Suction Piping	6"
4. Discharge Piping	6"
5. Discharge Header	8"
6. Discharge Outlet	8"

2. Butterfly Valves.

a. The isolating valves used throughout the equipment capsule will be of the wafer design. The body of each isolating valve will be constructed of cast iron ASTM-126 and be equipped with a minimum of four (4) alignment holes with which to pass mating flange studs so as to assure proper butterfly alignment within the piping system. The valve disc will be constructed of bronze ASTM-B148-9C and be machined to close tolerances on both the flats and O.D. to assure drop tight shut off and reduce operating torque. The valve stems will be constructed of phosphate coated carbon steel ASTM-108 Grade 1040 and the stem bushings will be non-metallic. The disc will be affixed to the shaft by a pair of taper pins. The valve seat will be phenolic backed EPDM resilient seat designed to be easily field replaceable.

b. Valve sized six (6) inches and smaller shall be equipped with lever operator and 10 degree increment throttling plate. Valve sized eight (8) inches and larger shall be equipped with a weatherproof, heavy duty, gear operator complete with a position indicator.

c. The butterfly valves for Pump 3 are to be included in the piping.

3. Compression Couplings.

a. Each pump suction and discharge pipe shall include a compression type, flexible coupling to prevent binding of the pump, pump suction or control valve. Each coupling shall consist of two (2) follower rings, a flared middle ring with end flares generous enough to provide adequate gasket seat areas, two (2) resilient rubber gaskets and steel bolts. The coupling when installed shall provide a permanent, leak-proof, flexible installation.

b. In lieu of a compression coupling, a restrained, removable flange such as Uni-Flange or a flanged coupling adapter (FCA) may be used to relieve strain on a pump or control valve. The flanged coupling adapter will be of the same manufacturer as the compression couplings used elsewhere in the equipment capsule and shall be a regular product of that manufacturer. Flanged coupling adapters shall be complete on the flanged end with an integral rubber flange gasket and on the open end with a triangular section rubber follower gasket and follower ring. Bolts for the flanged coupling adapter will be individual to the FCA and be supplied with the FCA.

4. Pressure Gauges.

a. All pressure gauges within the booster pumping station shall have 4-1/2" minimum diameter faces. The case shall be black, flanged back type with close type ring and clear glass face. The gauge connections shall be at the bottom of the gauge and will be 1/4" NPT. The gauge internal construction shall include phosphor bronze bourbon tube with a brass movement, bronze bushed independently mounted. Pressure gauge range and scale graduations shall be in feet of water and psi as follows:

1. Inlet Pressure: 0 to 100 psi, 10 psi figure intervals, with graduating marks every 1 psi.

2. Outlet Pressure: 0 to 160 psi, 20 psi figure intervals, with graduating marks every 2 psi.

b. All gauges will be panel mounted or fixture mounted off the pipeline or sensing point and be flexible connected to their respective sensing point. Gauges may be mounted singularly in tandem or in any organized combination. The gauge trim tubing shall

be complete with both isolating and vent valves and the tubing shall be so arranged as to easily vent air and facilitate gauge removal. Gauges mounted directly to the pipeline or sensing point will not be accepted.

5. Automatic Pump Check Valves.

a. The automatic pump check valves shall be of the electrical, double cushioned type and shall have a cast iron body and cover, angle pattern, with all bronze trim. The valves shall be faced, flanged and drilled to conform to 125# ANSI standards and shall be sized as shown in the plans.

b. The valves shall be of either the piston or diaphragm type. If the piston type, the valve shall have an all bronze liner with V-port openings. The piston shall also be of bronze and be equipped with an indicating rod. If of the diaphragm type, the diaphragm assembly shall be fully guided top and bottom. The valve shall be spring loaded to assure operating differential.

c. The design of the valve shall be such as to provide air and water cushioning to prevent hammer and shock. Speed of valve opening/closing shall be adjustable by hand operated regulating valves. Wear on the valve moving parts shall be absorbed by renewable leather or rubber cups and seat. The valve shall be designed to provide full pipe line flow when in the open position and shall shut off drop tight, when closed.

d. The automatic pump check valves shall provide normal automatic opening and closing function plus emergency closing on electrical outage. The valve will also provide a manual control to open the main valve.

e. The automatic pump check valves will be provided with an all bronze sustaining pilot. This pilot will be of the diaphragm operated, spring loaded, balanced type, providing an adjustable spring range of minimum of 70 psi. The pilot device will sense suction header pressure and throttle the main valve to maintain suction pressure. Should suction header pressure drop below minimum value, the sustaining pilot shall override the electrical controls and close the automatic pump check valve.

E. Electrical Apparatus - Design, Assembly, & Test.

1. General.

a. The electrical apparatus control panel design, assembly, and installation, and the integration of component parts will be the responsibility of the manufacturer of record for this booster pumping equipment. That manufacturer shall maintain at his regular place of business a complete electrical design, assembly and test facility to assure continuity of electrical design with equipment application. Control panels

designed, assembled or tested at other than the regular production facilities or by other than he regular production employees of the manufacturer of record for this booster pumping equipment will not be approved. These facilities must be open for inspection at any time during the design and assembly of the specified equipment.

b. The switchgear and supervisory controls will be tested by one (1) or more technicians independent of the equipment assembly. The test procedure shall be a complete function test. All control functions will be tested, a minimum of four (4) times hourly, for a consecutive trouble-free period of forty-eight (48) hours. At the request of the consulting engineer, the booster station manufacturer shall supply documentation of the test results. Such documentation will include a chart from an event recorder certifying the four (4) time hourly test cycle and the forty-eight (48) hour trouble-free duration. The event recorder chart will be attested to by a company officer of the booster station manufacturer.

2. U.L. Listing.

a. The manufacturer of the booster station shall be an Underwriters Laboratories listed manufacturer of Industrial Control Panels. As such, the manufacturer shall provide U.L. listing of the control panel for the station. In accordance with U.L. procedures, an authorized U.L. label, verifying the U.L. listing, shall be affixed to he back pan of the control panel. Additionally, the manufacturer shall provide certification of the listing. The manufacturers certification of U.L. listing shall consist of a signed statement of a corporate office attesting to the following:

1. The subject control panel has been U.L. listed.

2. The U.L. file number of the manufacturer under which the listing has been made.

3. The identification number or a Listing Mark of the specific U.L. label affixed to the back pan of the control panel to verify listing.

b. Control panel equipment shall not be accepted where any of the following occur:

1. The control panel is not U.L. listed.

2. Certification of the control panels U.L. listing is not provided.

3. The manufacturer is not a U.L. listed manufacturer of Industrial Control Panels.

4. The manufacturer of record for the booster pumping equipment is not also the manufacturer of the control panel.

3. Switchgear.

a. The electrical apparatus shall consist of all equipment associated with motor control and motor starting, including the equipment used to protect the electrical facilities. All circuit breakers, motor starters, time delay relays and control relays shall be incorporated to one (1) NEMA I control panel. Space shall be provided in the control panel for the motor breaker, motor starter and controls for future Pump 3. Conduit from the control panel to the location of the future motor shall be complete in place. The electrical service provided for this station will be 460 volt, 3 phase, 60 cycle 3 wire. There shall be provided, thermal-magnetic trip circuit breakers as follows:

1. Two (2) Branch Breakers, one each per pump, 40 amps.

2. One (1) Transformer Breaker, Primary Side, 40 amps.

b. There shall be provided seven (7) Auxiliary Circuit Breakers as follows:

1. Controls.

2. Lights.

3. Heater.

4. Area Light.

5. Sump Pump - Dehumidifier.

6. Exhaust Fan.

7. Convenience Outlets.

c. Pump starting equipment shall be three (3) phase, full voltage magnetic starters connecting the pump motor directly across the line, complete with overload relay with correctly sized heater elements on each line.

d. Balanced 240/120 single phase power for the auxiliary circuits within the scope of the booster station shall be obtained by use of a 10 KVA dry, step down transformer. The transformer shall be wall mounting type, dust tight and operate with low noise level. Transformer insulation shall be Class H. The unit shall be UL approved for indoor application.

4. Suction Pressure Control.

a. Suction control of the pumping operation shall be provided by a rugged snap action pressure switch. The switch action shall be actuated by a single brass bellow. Each switch assembly will feature straight in-line and relatively friction free construction and be complete with a single pole, double throw contact block with silver, 5 amp rated contacts at 120 volts. The set points of the on/off cycle shall be independently adjustable through the full range of switch differential.

1. Low Suction Cut-out, 0-150 psi range.

2. Adjustable Differential, 2-25 psi range.

b. A single 4-1/2 inch dial, flanged back pressure gauge shall be sub-panel mounted adjacent to the low suction pressure switch. The gauge and switch shall be so plumbed with the suction header sensing line that a common blow-off valve can relieve pressure in both simultaneously for purposes of checking and calibrating the low suction lock-out.

5. Local Pressure Control.

a. Control of the pumping operation shall be provided by bellows type, snap action switches. The switch action shall be actuated by a single brass bellows. Each complete switch assembly will be complete with two (2) internal switches, one (1) each to cover the start and the stop cycle. Each internal switch shall be independently adjustable so as to provide from 2. psi to full scale control differential. Switches are to be provided to control the following functions:

1. Start Lead Pump, 0 to 200 psi control range.

2. Start Back-up Pump, 0 to 200 psi control range.

b. A single 4-1/2 inch dial, flanged back pressure gauge shall be sub-panel mounted adjacent to the discharge pressure switches. The gauge and switches shall be so plumbed with the discharge header sensing line that a common glow-off valve can relieve pressure in all simultaneously for purposes of checking and calibrating the start-stop functions of the pumps.

c. Pressure switches and gauges shall be mounted in tandem, on a plate, as near to their respective pressure source as is practical. Switches and gauges will not be allowed within the electrical control panel.

6. Devices.

a. Five (5) solid state time delay relays shall be provided to perform the following functions:

1. Low Suction Timer.

2. Start Control Timer Pump 1.

3. Stop Control Timer Pump 1.

4. Start Control Timer Pump 2.

5. Stop Control Timer Pump 2.

b. The solid state time delay relay shall have three (3) dial selected timing ranges (1, 10 and 100 minutes). Nominally the timer will be factory set on the ten (10) minute range. The timers shall be constructed to use a standard octal eight pin plus-in base. All timer wiring shall be made to the plug-in base so that timers can be interchanged or replaced without disturbing timer wiring. The timer will be complete with a light emitting diode (LED) which will be on during the time cycle and off at the end of timing.

c. Hand-off automatic switches shall be oil tight, 3-position maintained and be located on the main control panel door and control the following circuits:

1. Pump 1.

2. Pump 2.

3. Exhaust Fan.

d. Indicating lights to indicate equipment operation shall be oil tight, with a full voltage pilot light. Indicating lights shall be provided in the colors and functions as follows:

1. Red - Low Suction Pressure.

2. Green - Pump 1 in Operation.

3. Green - Pump 2 in Operation.

e. Nameplates shall be furnished on all panel front mounted switches and lights. Name tags shall also indicate proper nomenclature of control panel internal parts.

f. The control panel door shall include a plastic pocket on the interior to hold one (1) copy of the panel wiring diagram. The wiring diagram shall be corrected as-built copy and contain individual wire numbers, circuit breaker numbers, switch designations and control function explanations.

7. Wiring and Lighting.

a. It shall be the responsibility of the installing electrician to furnish and install the correct size service wires from the service pole outside of the equipment capsule to the connection terminals inside the power or control panel designated for that purpose. No splice will be allowed in the service wires. It shall also be the responsibility of the installing electrician to furnish and install, if required, any exterior disconnects or other switching mechanisms, and seal the incoming conduit to prevent potential groundwater intrusion into station.

b. Rigid conduit, sized to adequately accept the inbound service connectors, shall be installed from the main power or control panel through the equipment capsule. The service entrance conduit connection shall be plugged for shipment.

c. All wiring within the equipment capsule and outside of the control panel or panels shall be run in conduit except for the watertight flexible conduit and fittings properly used to connect pump drivers, fan motors, solenoid valves, limit switches, etc., where flexible connections are best utilized. Such accessories as the sump pump and dehumidifier, when furnished by the original manufacturer with a U.L. approved rubber cord and plug, may be plugged into polarized receptacles designated for that purpose. All internal equipment conduit nd wire will meet or exceed the conduit, wiring schedule and electrical codes set forth as follows:

1. Service Entrance. Rigid, heavy wall, steel conduit with threaded watertight connections adequately sized to handle the type, number and size of the incoming service conductors - in compliance with Article 346 of the National Electrical Code.

2. Equipment Capsule Conduit. Rigid, heavy wall, Schedule 40 PVC with solvent weld moisture-proof connections adequately sized to handle the type, number and size of equipment conductors to be carried - in compliance with Article 347 of the National Electrical Code and NEMA TC-2, Federal WC-1094A and U.L.-651 Underwriters Laboratory Specifications.

3. Flexible Connections. Where flexible conduit connections are necessary the conduit used shall be liquid-tight flexible totally nonmetallic, corrosion resistant, nonconductive, U.L. listed conduit with a sunlight resistant jacket over an inner flexible core, sized to handle the type, number and size of equipment conductors to be carried - in compliance with Article 351 of the National Electrical Code.

4. Motor Circuit Conductors. Sized for load. All branch circuit conductors supplying a single motor of one (1) horsepower or more shall have an ampacity of not less than 125 percent of the motor full load current rating,

dual rated type THHN/THWN, as set forth in Article 30 and 430-B of the National Electrical Code, Schedule 310-13 for flame retardant, heat resistant thermoplastic, copper conductors in a nylon or equivalent outer covering.

5. Control and Accessory Wiring. Sized for load, type MTW/AWM (machine tool wire/appliance wiring material) as set forth in Article 310 and 670 of the National Electrical Code, Schedule 310-13 and NFPA Standard 79 for flame retardant, moisture, heat and oil resistant thermoplastic, copper conductors in compliance with NMTBA and as listed by Underwriters Laboratories (AWM), except where accessories are furnished with a manufacturer supplied U.L. approved rubber cord and plug. Four (4) duplex, grounding type, three (3) wire, polarized convenience receptacles shall be furnished about the periphery of the equipment capsule. One (1) duplex receptacle shall be adjacent to the main control panel. The equipment ground wire from each equipment ground post of the polarized receptacles shall be affixed at the main control panel terminal board solely designated for that purpose and separate from the neutral buss.

6. Lighting. There shall be three (3) two-tube, 40 watt per tube, rapid start, enclosed and gasketed fluorescent light fixture installed within the equipment capsule. One (1) light fixture shall be located directly over the main control panel and be forty-eight (48) inch minimum length. The light switch shall be of the night glow type and be located in the entrance manway, conveniently adjacent to the equipment capsule entrance ladder. Open or incandescent fixtures without OSHA approval will not be accepted.

F. HVAC.

1. Exhaust Fans.

a. There shall be included in the equipment capsule two (2) exhaust fans, flange mounted o the exhaust air piping as near the equipment capsule roof as is practical. Each fan capacity shall be 232 cfm at 0.2 inch static pressure (inches of water). Each fan shall feature a shaded pole motor with a squirrel cage blower. Each blower wheel shall be statically balanced to assure quiet performance and maximum air delivery. The fan motor will be complete with a conduit box. The exhaust fan shall operate on an independent 120 volt, single phase A.C. power source with single pole, 15 amp circuit breaker protection. Automatic control of the exhaust fan shall be by thermostat, air conditioning type (make on the rise) wired in parallel with a three (3) position maintained (H-O-A) selector switch located on the face of the main control panel. The exhaust fan control equipment shall be wall mounted in a receptacle box expressly designated for that purpose and in a location convenient for the use intended.

b. The exhaust air piping system shall be size three (3) inch and be welded through the roof and terminate at a point sixteen (16) inches above the roof. The cold air return piping system shall also be size three (3) inch and on the exterior begin sixteen (16) inches above the capsule roof and terminate on the interior as near the equipment capsule floor as is practical. Both exterior air system pipes will be complete with white, PVC 180 degree return bends that are equipped with removable aluminum wire mesh insect screening. Exhaust and return air piping must be rigid and permanently fixed. Flexible, spiral wound, or cloth ducts will not be accepted.

2. Dehumidifier. A packaged dehumidifier with a sealed refrigeration type compressor rated at 1/5 horsepower, 4.7 full load amps and 430 watts shall be wall mounted within the equipment capsule in such a manner that the condensate shall discharge to the sump through tubing provided for that purpose. The dehumidifier shall operate on a 120 volt, single phase A.C. power source and be provided with a safety protected power cord of U.L. approved 3 wire construction with 3 spade plug. The dehumidifier shall be capable of removing twenty-seven (27) pints of water in twenty-four (24) hours when the room temperature is 80 degrees fahrenheit and at 60% relative humidity. (AHAM) Standard DH-1). The dehumidifier shall be actuated by a dial-controlled adjustable humidistat which will automatically cycle the unit at pre-selected moisture levels. The humidistat shall also have Off and Continuous Run positions. The dehumidifier shall be listed by Underwriters Laboratories.

3. Heater.

a. The equipment capsule will be provided with an electric heater. The heater will have a rating of 3,000 watts, 10,240 BTU/HR output when operating on a 240 volt, single phase A.C. power source. The heater will be equipped with a 600 rpm low speed axial vane blower designed to deliver 175 cfm of down flow air and be driven by a four (4) pole motor. The heating element shall be of the sealed tubular type with a large parallel steel fins for quick heat transfer. The heater will be complete with a thermal overload cut off and a built in thermostat calibrated to provide a range of 55 degrees fahrenheit to 85 degrees fahrenheit.

b. The heater shall be wall mounted, hard wired and complete with an individual 240 volt circuit, protected by a 2 pole, 15 amp circuit breaker. The heater will be listed with Underwriters Laboratories, NEMA Standard 3-9-1967, HE2-2-02 Type I.

4. Sump Pump.

a. One (1) automatic submersible sump pump, with a rated capacity of ten (10) gpm at fifteen (15) feet TDH shall be installed in the equipment capsule sump. The sump pump shall be complete with fractional horsepower motor, oil filled and hermetically sealed, designed to operate at 3,450 rpm, on a 120 volt, single phase, AC power

source and draw no more than 4.2 amps. A Buna-N shaft seal shall prohibit the pumped fluid from entering the motor housing. The pump body shall be constructed of aluminum and polypropylene and the motor casing shall be cast aluminum. The impeller shall be made of polypropylene plastic and affixed to a 304 grade stainless steel shaft. The sump pump will be clog-proof energy efficient design with built in thermal protection. There shall also be included as an integral component of the pump a built in check valve on the discharge. The sump pump shall operate within an approximate 2.5 inch range turning on at approximately five (5) inches and off at approximately 2.5 inches of depth in the sump. Therefore, the sump pump will initiate a pumping cycle before sump is filled.

b. The sump pump discharge piping within the equipment capsule shall be size 1-1/4 inch to the coupling in the equipment capsule Schedule 40 PVC with solvent weld connections. The discharge piping system will be complete with a union connecting upper and lower halves of the discharge line. An optional dewatering drain system for freeze protection shall be designed into the sump pump discharge piping system. The dewatering line shall be included with the equipment and will be field installed, if required, by the start-up technician.

G. Factory Start-Up Service.

1. After the packaged water booster pump station has been completely installed including the electrical service and has been put under pressure by the installer, then a factory service representative will be scheduled to visit the jobsite and put the booster station into trouble free, automatic operation. The service representative will be a regular employee of the booster pump station manufacturer.

2. The service representative will spend one (1) full day at the jobsite. In addition to his start-up duties, he shall explain and demonstrate the operation of the booster pump station to a representative of the owner. The service representative at this time shall pass over to the owners representative two (2) bound copies of the booster pump station maintenance and operation manual.

3. A complete service report shall be made out and signed by the factory service representative and a representative of either the owner or project engineer. Copies of the start-up report will be distributed as follows: one (1) copy each to the manufacturers project file, consulting engineers project file, contractors project file and the owners equipment file.

Section 2-4. Standard Details.

See Appendix A.

ARTICLE III
WATER SYSTEM REGULATIONS

Section 3-1. Classification of Service.

All services are classified under two categories to include residential, schools, churches and commercial users.

A. Residential service: to include all residential buildings with meter size of 3/4" or 1".

B. Commercial service: to include all businesses regardless of meter size, and single family or multi-family residential properties with meter size greater than 1".

Section 3-2. Rate Schedule and Tap-On Fee.

A. All customers will be billed at the rate currently in effect and approved by the Town Council of Boone. Said rate schedule is attached hereto as Appendix B and is incorporated herein by reference.

B. Multi-residential users, such as duplex apartments, served through one meter greater than 1" in size will be billed at the Towns published commercial rates.

C. Availability Fee: For each unit, the availability fee then in effect at the time the building permit is issued plus additional charges to reflect actual time and materials involved will be charged to the applicant.

D. Water and/or sewer service will not be started by the Town of Boone until the two previous invoices for availability fees and time and materials are paid.

E. Each Customer shall be charged the availability fee in effect at the time the Customers zoning permit is issued. Each Customer shall also be charged a hook-on fee equal to the actual labor, equipment and materials cost incurred by the Town installing the necessary lines and meter for the Customer.

F. Water and/or sewer service will not be started by the Town until the Customer has paid the hook-on fee.

G. Any property owner who has a waiver and/or sewer account with the Town of Boone may sign a waiver of meter deposit and sponsor a rental account if said property owner has a satisfactory credit rating with the Town of Boone Public Utilities Department. In the event that the renter fails to pay their final bill in full within twenty (20) days of the billing date, the delinquent account balance owed to the Town by the renter will be automatically added to the sponsor's account.

Section 3-3. Application for Service.

A. Service will be supplied only to those who have become bona fide customers.

B. Customers will make application for service, in person, at the office of the Town and at the same time, make a deposit guarantee required below.

C. The Town may reject any application for service not available under a standard rate or which involves excessive service cost, or which may affect the supply of service to other customers or for other good and sufficient reasons, in which case, the deposit will be refunded.

D. The Town may reject any application for service when the applicant is delinquent in payment of bills incurred for service previously supplied at any location, provided that when the owner of the premises has been served water and has not paid for the same, the Town shall not be required to render service to anyone at said location where the water was used until said water bill has been paid.

E. Effective July 1, 1987, the Town of Boone will provide no service involving line extensions outside the corporate limits of the Town to new applicants unless specifically approved by the Town Council.

Section 3-4. Deposit.

A. Rental property customers will make a minimum cash deposit at the rate currently in effect.

B. The individual in whose name the account is established shall be responsible for payment of all bills incurred in connection with the service furnished.

C. A separate deposit is required for each meter installed on rental property.

D. The deposit receipt is not negotiable and can be redeemed only at the Towns offices.

E. When the Town finds that the request for a deposit refund is questionable, the Town will require the applicant for refund to produce the deposit receipt properly endorsed.

F. A security deposit at the rate in effect as shown on Appendix A will be required from all contractors requesting a temporary construction meter. This deposit will be refunded upon return of the meter or applied against the customers account at the time of permanent installation.

Section 3-5. Initial or Minimum Charge.

A. The initial or minimum charge, as provided in the rate schedule, shall be made for each meter installed, regardless of location. Each meter requires a separate meter reading sheet,

and each meter reading sheet shall cover a separate and individual account.

B. In resort areas where service is furnished to a consumer during certain months only, the minimum charge per service for the period of non-use shall be the regular minimum as set out in the published rates of the corporation.

C. Water furnished for a given lot shall be used on that lot only. Each consumers service must be separately metered at a single delivery and metering point. Each commercial unit and each storeroom or stall used for business purposes shall have a separate meter. All commercial use, including storerooms and stalls for business purposes, shall be metered separately from any residential use and vice versa, whether now in service or to be installed in the future.

Section 3-6. Towns Responsibility and Liability.

A. The Town shall run a service line from its distribution line to the property line where the distribution line runs immediately adjacent and parallel to the property to be served, and for which a tap-on fee then in effect for each size of meter will be charged.

B. The Town may install its meter at the property line or, at the Towns option, on the customers property or in a location mutually agreed upon.

C. When two or more meters are to be installed on the same premises for different consumers, they shall be closely grouped and each clearly designated to which consumer it applies.

D. The Town does not assume the responsibility of inspecting the consumers piping or apparatus and will not be responsible therefore. Consumers piping or apparatus is defined as all piping or apparatus from the consumers side of the meter through his property.

E. The Town reserves the right to refuse service unless the consumers lines or piping are installed in such manner as to prevent cross-connections or backflow.

F. The Town shall not be liable for damage of any kind whatsoever resulting from water or the use of water on the consumers premises, unless such damage results directly from negligence on the part of the Town. The Town shall not be responsible for damage done by or resulting from any defect in the piping, fixtures or appliances on the consumers premises. The Town shall not be responsible for negligence of third persons or forces beyond the control of the Town resulting in any interruption of service.

G. Under normal conditions, the consumer will be notified of any anticipated interruption of service.

Section 3-7. Consumers Responsibility.

A. Piping on the consumers premises must be so arranged that the connections are conveniently located with respect to the Towns lines or mains.

B. If the consumers piping on consumers premises is arranged that the Town is called upon to provide additional meters, each place of metering will be considered as a separate and individual account.

C. Where meter is placed on the premises of a consumer, a suitable place shall be provided by consumer for placing such meter unobstructed and accessible at all times to the meter reader.

D. The consumer shall furnish and maintain a private cutoff valve on the consumers side of the meter; the Town to provide a like valve on the Towns side of the meter.

E. The Towns piping and apparatus shall be installed and maintained by the consumer at the consumers expense in a safe and efficient manner and in accordance with the Towns rules and regulations and in full compliance with the sanitary regulations of the North Carolina Department of Human Resources.

F. The consumer shall guarantee proper protection for the Towns property placed on the consumers premises and shall permit access to it only by authorized representatives of the Town.

G. In the event that any loss or damage to the property of the Town or any accident or injury to persons or property is caused by or results from the negligence or wrongful act of the consumer, his agents or employees, the cost of the necessary repairs or replacements shall be paid by the consumer to the Town; and any liability otherwise resulting shall be assumed by the consumer.

H. The amount of such loss or damage or the cost of repairs shall be added to the consumers bill; and if not paid, service may be discontinued by the Town.

Section 3-8. Access to Premises.

A. Duly authorized agents of the Town shall have access at all reasonable hours to the premises of the consumer for the purpose of installing or removing Town property, inspecting piping, reading or testing meters or for any other purpose in connection with the Town's service and facilities.

B. Each consumer shall grant or convey or shall cause to be granted or conveyed, to the Town a perpetual easement and right of way across any property owned or controlled by the consumer wherever said perpetual easement and right of way is necessary for the Town water facilities and lines so as to be able to furnish service to the consumer.

Section 3-9. Change of Occupancy.

A. Not less than three (3) days notice must be given in person or in writing, at the Towns office, to discontinue service for a change in occupancy.

B. The outgoing party shall be responsible for all water consumed up to the time of departure or the time specified for departure, whichever period is longer.

Section 3-10. Meter Reading - Billing - Collecting.

A. Meters will be read and bills rendered as follows: Monthly billing with bills due on the first of each month; but the Town reserves the right to vary the dates or length of period covered, temporarily or permanently if necessary or desirable.

B. Bills for water will be figured in accordance with the Towns published rate schedule then in effect and will be based on the amount consumed for the period covered by the meter readings.

C. Charge for service commences when the meter is installed and connection made, whether used or not. Sixty (60) days may be allowed for hookup on initial installation of the water system.

D. Readings from different meters will not be combined for billing, irrespective of the fact that said meters may be for the same or different premises, or for the same or different consumer, or for the same or different services.

E. Bills are due when rendered and become delinquent twenty (20) days thereafter. Bills not paid prior to the last working day of each month shall be subject to the late fee currently in effect, unless by signed agreement the customer is making regular, scheduled payments each month.

F. Failure to receive bills or notices shall not prevent such bills from becoming delinquent or relieve the consumer from payment.

G. Effective July 1, 1987, the Town of Boone will not accept any new accounts for private water system discharge into its sanitary sewer system with the exception of ASU's water system.

H. Sewer bills for all private water systems shall be computed by either (a) meter or (b) the owner may accept the NRCD flow chart used to figure water and sewer availability fees as a means of obtaining discharge averages.

I. All private water systems must, within sixty (60) days of notice, notify the Town as to which method of measurement they wish the Town to use for their sewer bill. If at the end of sixty (60) days, the Town has not heard from the owner, the service will be disconnected from the Towns system.

Section 3-11. Suspension of Service.

A. Upon discontinuance of service for nonpayment of bills, the deposit will be applied by the Town toward settlement of the account. Any balance will be refunded to the consumer; but if the deposit is not sufficient to cover the bill, the Town may proceed to collect the balance in the usual way provided by law for the collection of debts.

B. The following policy on water and sewer delinquent account collection will be followed:

1. After following the appropriate notice procedures, the Town should cut off the water to any residential unit in which the water and sewer bill is more than one (1) month in arrears, or is more than $200.00 in arrears. The Town may lock the meter anytime after service is disconnected.

2. After following the appropriate notice procedures, the Town should cut off the water to any commercial establishment in which the water and sewer bill is more than one month in arrears, or $400.00 in arrears. The Town may lock the meter anytime after service is disconnected.

3. The Town should not reinstall the meter to any customer whose meter has been locked until:

   a. the entire delinquent account has been paid in full, and

   b. the customer pays in advance the installation charge of said meter.

4. In the event a bill is less than $3,000.00, the Town should file an action in Small Claims Court in an effort to collect the delinquent bill.

5. In the event a bill is greater than $3,000.00, the delinquent account should be turned over to the Town Attorney for collection.

6. No action should be filed in either Small Claims Court or District Court without the express approval of the Town Council.

7. The Town reserves the right on a case by case basis to work out a payment schedule with the individual delinquent customer.

8. The Town Manager or Town Attorney shall have the authority to negotiate all bills less than $1,000.00.

C. Service discontinued for nonpayment of bills will be restored only after bills are paid in full, redeposit made, and a service charge at the rate currently in effect paid for each meter

reconnected.

D. The Town may in addition to prosecution by law, permanently refuse service to any consumer who tampers with a meter or other measuring device.

Section 3-12. Prohibited Activities.

A Customer shall not:

A. Supply or sell water from the Towns system to other persons or carry water away from any hydrant, public water fountain, or other such public outlet without specific authorization from the Town;

B. Manipulate, tamper with or harm in any manner whatsoever any water line, sewer line, main or appurtenance or any other part of the water or sewer system, including, but not limited to, any testing or inspection device used to measure the character or concentration of wastes discharged into the sanitary sewer system;

C. Tamper with the water meter so as to alter the true reading for the amount of water consumed;

D. Attach or cause to be attached any connection to the water line before the water meter; and,

E. Knowingly make any false statement, representation or certification in any application, record, report, plan or other document filed or required to be maintained under this Chapter.

Section 3-13. Termination or Interruption of Service by Town.

A. The Town may terminate service for any of the following reasons:

1. Refusal by the Customer to pay in full an account within 30 days after the billing date;

2. Prevention of fraud or abuse by a Customer; and,

3. Failure of the Customer to comply with any of the provisions of this Chapter.

B. Before service is terminated, the Customer shall be notified of the proposed termination and given an opportunity to be heard on the matter as provided in this Article.

C. The Town reserves the right to discontinue or interrupt service temporarily for any of the following reasons:

1. Emergency repairs;

2. Insufficient supply or treatment capacity;

3. Strike, riot, flood, accident, act of God, or any other unavoidable cause; and,

4. The direction of public authority.

D. The Town shall make a good faith effort to notify affected Customers before service is discontinued or interrupted as provided in Subsection C. However, the Customer, by making application for service, agrees to hold the Town harmless from liability for any damages that may occur due to discontinuance or interruption of service for the above-mentioned causes.

Section 3-14. Notice of Proposed Termination of Service and Right of Hearing.

A. Before the Town cuts off a Customer's water service, the Town should send the customer a notice as follows:

1. Setting forth the appropriate rule and how the customer violates it;

2. Stating the action the customer must take to comply with the rule;

3. Giving the customer ten (10) days from the receipt of the notice to such action;

4. Informing the customer he has a right to appeal this action and to have a hearing before an impartial Town official;

5. Giving the customer ten (10) days from the receipt of said notice to request in writing such a hearing;

6. Informing the customer that if the necessary action is not taken, or if an appeal is not filed within the specified time, his water service will be cut off.

Section 3-15. Hearing.

A. The hearing provided for in the previous section may be held by phone or, at the request of the Customer, the Customer may meet in person with the Town Official at the official's office (as specified in the notice described in Section 3-14.

B. The hearing shall be conducted formally. The Customer shall be given every reasonable opportunity to bring to the attention of the designated official information that bears upon the reasons for the proposed termination.

C. If the Customer is dissatisfied with the result of the hearing, the Customer may appeal the official's decision to the Town Manager. The Manager's decision shall be final.

Section 3-16. Deposit Required to Stay Termination.

Termination of service for nonpayment of bills shall not be stayed pending the outcome of the hearing procedures set forth in Section 3-15 unless the Customer pays to the Town a deposit equal to the amount of the disputed bill. Depending on the outcome of the hearing process, this deposit shall be applied toward payment of the bill, or refunded, as appropriate.

Section 3-17. Procedure for Service Termination and Reinstatement.

A. Water and sewer service termination shall be effected only by authorized agents of the Town.

B. When service is terminated, discontinued or interrupted for any reason as set forth in Section 3-13, no person other than a duly authorized agent or employee of the Town may cause, suffer or permit the resumption of service.

C. When service is terminated for non-payment of bills, the service application deposit shall be applied to the outstanding bill within five (5) working days.

D. If there are deposit funds remaining after the deposit is applied to the outstanding bill, the excess shall be refunded to the Customer. If a portion of the bill remains outstanding, the Town may proceed to collect the balance in the usual way provided by law for the collection of debts.

E. Before service will be reinstated, the Customer shall be required to make full payment of any charges still outstanding on his account. In addition, the Customer shall also increase his deposit with the Town with an amount equal to his application deposit or the amount of the bill outstanding at the time of termination, whichever is greater.

F. A charge for reconnecting service shall be made pursuant to **Appendix B**.

Section 3-18. Termination at Customers Request.

A. A request that service be terminated (for a change in occupan cy or other reason) shall be submitted to the Town Clerk (in writing or in person) at least three days before the Customer desires the termination to become effective.

B. The Customer shall be responsible for all water consumed and for pro-rated service up to the time service is terminated, or until three days following receipt of the request for termination, whichever occurs sooner.

C. When all charges for service are paid in full, the Customers deposit shall be refunded.

D. The Customer shall be entitled to be heard by a designated employee concerning any dispute about the amount of the deposit refund. The employee shall inform the Customer in writing of his decision and the reasons therefor as soon as reasonably possible.

Section 3-19. Suspension of Service.

The Town reserves the right, upon action by the Town Council, to discontinue its water and/or sewer service to any customer whose property is outside the corporate limits of the Town of Boone upon giving a minimum sixty (60) day written notice of its intent to terminate water and/or sewer service.

Section 3-20. Complaints - Adjustments.

A. If the consumer believes his bill to be in error, he shall present his claim, in person, at the Town office before the bill becomes delinquent. Such claims if made after the bill has become delinquent, shall not be effective in preventing discontinuance of service as heretofore provided. The consumer may pay such bill under protest and said payment shall not prejudice his claim.

B. The Town will make special meter readings at the request of the consumer for the fee currently in effect provided, however, that if the special reading discloses that the meter was overread, no charge will be made.

C. Meters will be tested at the request of the consumer upon payment to the Town of the actual cost to the corporation of making the test provided; however, that if the meter is found to overregister beyond ten per centum (10%) of the correct volume, no charge will be made.

D. If the seal of a meter is broken by other than the Towns representative or if the meter fails to register correctly or is stopped for any cause, the consumer shall pay an amount estimated from the record of his previous bills and/or from other proper data.

Section 3-21. Abridgment or Modification of Rules.

A. No promise, agreement or representation of any employee of the Town shall be binding upon the Town except as it shall have been agreed upon in writing, signed and accepted by the acknowledged officers of the Town.

B. No modification of rates or any of the rules and regulations shall be made by any agent of the Town.

Section 3-22. Adoption of Rules.

Until further order of the Town Council of this Town, the rules and regulations as the same are hereinabove set out are hereby adopted as of the date hereof.

Section 3-23. Availability Fee.

A. Policy Statement.

Each new demand on the Towns water and/or sewer system uses up a portion of the remaining capacity of the Towns water and/or sewer plants. Eventually these new demands create the need to build additional plant capacity. This section codifies the Towns policy that Customers who create additional demands for water and/or sewer service should fund the cost of constructing additional plant capacity required to meet these demands.

B. Applicability.

The Availability Fee shall be paid:

1. By all new Customers to the Towns water and/or sewer system that place an additional demand on said system; and

2. By all existing Customers to the Towns water and/or sewer system that place an additional demand on said system through an expansion or a modification of an existing structure.

C. Measurement of New Demand.

The new demand placed on the system by the Customer shall be determined according to the schedule set forth in Appendix C.

D. Determination of the Availability Fee.

1. The amount of the Availability Fee for the water system shall be determined by multiplying the Customer's new demand in the terms of the (measured daily flow rate) by the rate currently in effect per gallon.

2. The amount of the Availability Fee for the sewer system shall be determined by multiplying the Customer's new demand in terms of the (measured daily flow rate) by the rate currently in effect per gallon.

E. Capital Reserve Fund.

1. All Availability Fees collected by the Town from Customers that place additional demands on the Towns water system shall be placed in the Towns Water Reserve Fund and shall be earmarked for the construction of additional plant capacity.

2. All Availability Fees collected by the Town from Customers that place additional demands on the Towns sewer system shall be placed in the Towns Sewer Reserve Fund and shall be earmarked for the construction of additional plant capacity.

F. Transferability.

The Availability Fee attaches to the real property receiving water and/or sewer service. The Availability Fee paid by the Customer automatically transfers to the new owner at the time the property is sold or transferred. The Availability Fee cannot be transferred to a different lot except when an owner combines adjoining lots for a single residential or commercial purpose.

G. Credit.

Any property owner who makes an offsite improvement to the Town's water and/or sewer system infrastructure after March 27, 1997, shall be entitled to a credit toward that customer's availability fee according to the conditions set forth below.

1. The credit only applies to "offsite" water and sewer infrastructure improvements, not "onsite" improvements. The terms "onsite" improvements means those improvements made on the owner's property.

2. The credit only applies to the property for which the offsite improvements were made. The credit cannot be transferred to other property of the customer.

3. This credit shall expire and become null and void three (3) years after the completion of the offsite improvements to the Town's water and/or sewer system infrastructure.

4. The property owner may receive a maximum credit of 50% for every dollar spent on offsite improvements to be applied towards that customer's availability fee. This credit is based upon the customer's investment in the Town's water and/or sewer system infrastructure calculated at the market rate in effect at time of the investment. Expenses the customer is entitled to include within this credit include labor and material costs. However, the customer shall not include secondary or indirect costs such as engineering fees. The Town will not give a credit for more than the existing market rate for labor and materials.

5. This credit cannot be sold, conveyed or otherwise transferred to another tract of land or to another customer.

6. It shall be the responsibility of the customer to provide the Town with all necessary documentation to prove the actual expenses incurred in making the offsite improvements.

7. The availability fee credit will be based upon the availability fee rate in existence at the time an application for a credit is submitted.

8. In no event shall any payment be made from the Town to the customer for this credit.

H. Effective Date.

This amendment shall take effect upon adoption by the Town Council. Any Customer who paid an Availability Fee from August 25, 1987 through February 24, 1988, shall be entitled to a refund equal to the difference between said Availability Fee and the old tap on fee in effect on August 24, 1987. Any Customer who received a zoning permit prior to February 25, 1988 shall pay the old tap on fee in effect on August 24, 1987 in lieu of an Availability Fee.

I. Variance.

A Variance from the provisions of Section 3-23 (Availability Fee) may be granted by the Town Manager or his designee whenever strict enforcement of said provisions would result in a hardship to the Customer, **and** if by granting the Variance the intent of Section 3-23 will be satisfied. A full or partial Variance may be granted only when **all** of the following requirements are met.

1. The party requesting the Variance is an existing **commercial** Customer of the Town and has been in business since Feb. 25, 1988 or has paid an Availability Fee.

2. The commercial Customer requesting the Variance is relocating the business to another location within the Town of Boone.

3. The demand on the Town's water and/or sewer system at the commercial Customer's previous location will be substantially reduced or will be eliminated, causing the net effect of the move to have less impact on water and/or sewer use than would the opening of a similar new business.

4. The intent of Section 3-23 will be satisfied by the granting of the Variance.

5. The owner of the property at the Customer's previous location must give the Town a written Release releasing all right, title and interest in the Availability Fee for which a Variance is granted.

6. All of the conditions set forth herein must be satisfied within two (2) years after the customer closes its business at its pervious location.

7. The credit given shall not be greater than the Availability Fee actually paid by the Customer.

In the event a variance is granted, the dollar value of the credit shall be calculated by (a) using the

Customer's availability fee paid at the previous location or (b) using the Customer's actual usage at the previous location. Further, if the Customer disagrees with the manner in which the Town calculates the demand at the new location, the Customer may request that the Town measure the actual usage at the new location for a 24 month period, and re-calculate the Availability Fee based upon an average of the three (3) highest months during that 24 month period. This re-calculation may result in a refund to the Customer or in a payment to the Town.

J. Variance for Local Government User.

A variance from the provisions of this Section (Availability Fee) may be granted by the Town Manager or his designee whenever strict enforcement of said provisions would result in a hardship to a Local Government User, and if by granting the variance the intent of this section will be satisfied. A full or partial variance may be granted only when all of the following requirements are met.

1. The Local Government User requesting the Variance is an existing customer of the Town.

2. The Local Government User requesting the Variance is relocating the governmental functions for which the water and/or sewer use is currently utilized ("the former location") to another location within the Town of Boone.

3. The owner of the property at the former location, which may be the Local Government User itself, must give the Town a written release and acknowledgment relinquishing all right, title and interest in water and/or sewer services at the former location, acknowledging that no new connections to the water and/or sewer system will be allowed at the former location without the payment of the appropriate Availability Fee for the proposed use for the former location, and acknowledging that no new connections to the water and/or sewer system will be allowed at the former location without a new approval, in accordance with the Town of Boone Water and Sewer Use Ordinance, of a water and/or sewer connection there.

4. No new application for a water and/or sewer connection(s) to the former location may be submitted until the nature of the new use at the former location is certain.

5. The credit given upon the granting of a variance under this section shall not be greater than the Availability Fee actually paid by the Local Government User at the former location.

In the event a variance is granted, the dollar value of the credit shall be calculated by (a) using the Local Government User's availability fee paid at the previous location or (b) using the Local Government User's actual usage at the previous location.

K. Low Income Housing.

The Town will grant a credit of 50% of the availability fee for the construction of low income housing when the construction is undertaken by a 501 (C)(3) non-profit corporation and the housing will be occupied by persons or families with incomes at or below 60% of the area median income and there are contractual limitations on the free transferability of property, if it is to be owned, or legal limitations on the conversion of the housing to use by persons or families with incomes higher than 60% of the area median income, if it is to be leased.

ARTICLE IV
SEWER USE REGULATIONS

Section 4-1. Findings and Declaration of Policy.

The Town Council hereby finds that the requirements for the issuance of federal grants and the acceptance of such grants by the Town of Boone under Title II of the Federal Water Pollution Control Act Amendments of 1972, as amended, (Public Law 92-500, as amended) and the regulations of the United States Environmental Protection Agency as promulgated in the September 27, 1978 Federal Register, Volume 43, Number 188, Part III for the construction of waste treatment works to improve the quality of effluent discharges from the Town of Boone established:

A. The necessity of adopting a user charge system that would be proportionate to all classes of users and produce the revenue required to sustain the wastewater collection and wastewater treatment system;

B. The necessity of enacting regulations that control the user and inflow into the wastewater treatment works.

Section 4-2. Reserved.

Section 4-3. Unlawful to Deposit.

It shall be unlawful for any person to place, deposit, or permit to be deposited in any unsanitary manner on public or private property within the Town of Boone or in any area under the jurisdiction of said Town any human or animal excrement, garbage or objectionable waste.

Section 4-4. Unlawful to Discharge.

It shall be unlawful to discharge to any natural outlet within the Town of Boone or in any area under the jurisdiction of said Town any wastewater or other polluted waters, except where suitable treatment has been provided in accordance with subsequent provisions of this ordinance.

Section 4-5. Unlawful to Construct.

Except as hereinafter provided, it shall be unlawful to construct or maintain any privy, privy vault, septic tank, cesspool, or other facility intended or used for the disposal of wastewater.

Section 4-6. Required Facilities.

The owner of all houses, buildings, or properties used for human occupancy, employment, recreation or other purposes, situated within the Town and abutting on any street, alley or right-of-way in which there is now located or may in the future be located, a public sanitary sewer of the Town, is hereby required at the owners expense to install suitable toilet facilities therein, and to connect such

facilities directly with proper public sewer in accordance with the provisions of this ordinance, within ninety (90) days after date of official notice to do so, provided that said public sewer is within one hundred (100) feet (30.5 meters) of the property line.

Section 4-7. Rainwater Harvesting and Reuse Systems.

Rainwater Harvesting and Reuse Systems with a capacity less than 500 gallons may directly or indirectly connect to the sanitary sewer system only with written approval of the Superintendent. Rainwater Harvesting and Reuse Systems with a capacity of 500 gallons or more may directly or indirectly connect to the sanitary sewer system if they met the following criteria:

A. The system must include a meter provided by the town, at the consumers expense, which allows the Town to accurately monitor the flow of water into the public sanitary sewer system;

B. The system user timely pays for the consequent use of the public sanitary sewer system at rates established by the Boone Town Council;

C. The system must use the water for the limited purposes of flushable fixtures and/or only, and

D. The system user must obtain written approval from the Superintendent prior to installation of the system.

Section 4-8. Private Wastewater Disposal.

Where a public sanitary sewer is not available under the provisions of Article IV, Section 4-6, the building sewer shall be connected to a private wastewater disposal system complying with the provisions of this article.

Section 4-9. Permit Required.

Before commencement of construction of a private wastewater disposal system, the owner(s) shall first obtain a written permit signed by the Superintendent. The application for such permit shall be made on a form furnished by the local government which the applicant shall supplement by any plans, specifications, and other information as are deemed necessary by the Superintendent. A permit and inspection fee of the rate then in effect shall be paid to the local government at the time the application is filed.

Section 4-10. Effective Date of Permit.

A permit for a private wastewater disposal system shall not become effective until the installation is completed to the satisfaction of the Superintendent. The Superintendent shall be allowed to inspect the work at any stage of construction; and in any event, the applicant for the permit shall

notify the Superintendent when the work is ready for final inspection and before any underground portions are covered. The inspection shall be made within forty-eight (48) hours of the receipt of the notice by the Superintendent.

Section 4-11. Compliance of Private Wastewater Systems.

The type, capacities, location and layout of a private wastewater disposal system shall comply with all recommendations of the Department of Public Health of the State of North Carolina. No permit shall be issued for any private wastewater disposal system employing subsurface soil absorption facilities where the area of the lot is less than 20,000 square feet. No septic tank or cesspool shall be permitted to discharge to any natural outlet.

Section 4-12. Required Connection.

At such time as a public sewer becomes available to a property served by a private wastewater disposal system, as provided in Article IV, Section 4, a direct connection shall be made to the public sewer within sixty (60) days in compliance with this ordinance, and any septic tanks, cesspools, and similar private wastewater disposal facilities shall be cleaned of sludge and filled with clean bank run gravel or dirt.

Section 4-13. Sanitary Manner.

The owner(s) shall operate and maintain the private wastewater disposal facilities in a sanitary manner at all times, at no expense to the local government.

Section 4-14. Additional Requirements.

No statement contained in this article shall be construed to interfere with any additional requirements that may be imposed by the health officer.

Section 4-15. Use of Grey Water Prohibited.

The use of grey water is prohibited.

Section 4-16. Unauthorized Connections.

No unauthorized person(s) shall uncover, make any connections with or opening into, use, alter, or disturb any public sewer or appurtenance thereof without first obtaining a written permit from the Superintendent.

Section 4-17. Building Sewer Permits.

There shall be two (2) classes of building sewer permits:

A. For residential and commercial service, and

B. For service to establishments producing industrial wastes. In either case, the owner(s) or his agent shall make application on a special form furnished by the local government. The permit application shall be supplemented by any plans, specifications, or other information considered pertinent in the judgment of the Superintendent. A permit and inspection fee for a residential or commercial building sewer permit and for an industrial building sewer permit shall be paid to the local government at the time the application is filed according to the most recent fee schedule as prescribed by the local government and on file in the office of the Clerk. This fee may be waived in whole or in part at the discretion of the local government.

Section 4-18. Costs of Installation.

All costs and expenses incidental to the installation and connection of the building sewer shall be borne by the owner(s). The owner(s) shall indemnify the local government from any loss or damage that may directly or indirectly be occasioned by the installation of the building sewer provided, however, that such indemnification shall not extend to loss or damage due solely to willful misconduct or negligence on the part of the local government.

Section 4-19. Separate Sewers Required.

Excluding industrial plant sites or other sites which have written approval from the Superintendent for single discharge points, a separate and independent building sewer shall be provided for every building, except where one building stands at the rear of another on an interior lot and no private sewer is available or can be constructed to the rear building through an adjoining alley, courtyard or driveway, the front building may be extended to the rear building and the whole considered as one building sewer; but the local government does not and will not assume any obligation or responsibility for damage caused by or resulting from any such single connection aforementioned. The Town, upon action by Council, may waive the requirements of this Section, but shall never be obligated to, when the following conditions are met:

A. The waiver is temporary, and shall be no more than two years, and shall end on a date certain.

B. The Customer signs a written agreement with the Town agreeing to abide by all the terms and conditions of the Agreement.

C. The Customer provides the Town with all Easements that may be necessary to terminate the service.

Section 4-20 to 4-21 Reserved.

Section 4-22. Old Building and Existing Building Sewers.

Old building and existing building sewers may be kept in service if, in the opinion of the Superintendent, they are in acceptable structural condition and operate satisfactorily. All new building sewers including any necessary replacement of old building and existing building sewers must comply with the following conditions:

A. The building sewer shall be PVC SDR 35 ASTM D3034 (gasket type), Ductile Iron Class 50 ANSI/AWWA C104/A21.4, Schedule 40 Sewer & Drain ASTM 2729, Schedule 80 PVC ASTM D1785, or other suitable material approved by the Superintendent. Joints shall be tight and waterproof. Any part of the building sewer that is located within 10 (ten) feet of a water service pipe shall be constructed of Ductile Iron pipe. Ductile Iron Pipe may be required by the Superintendent where the building sewer is exposed to damage by tree roots. If installed in filled or unstable ground, the building sewer shall be Ductile Iron pipe, except that nonmetallic material may be accepted if laid on a suitable concrete bed or cradle as approved by the Superintendent.

B. The size and slope of the building sewer shall be subject to the approval of the Superintendent. Whenever possible, the building sewer shall be brought to the building at an elevation below the basement floor. In all buildings in which any building drain is too low to permit gravity flow to the public sewer, sanitary wastewater carried by such building drain shall be lifted by a means approved by the Superintendent and discharged to the building sewer. No building sewer shall be laid parallel to or within five (5) feet of any bearing wall, which might thereby be weakened. The depth shall be sufficient to afford protection from frost. The building sewer shall be laid at uniform grade and in straight alignment insofar as possible. Changes in direction shall be made only with property curved pipe and fittings.

C. All excavations required for the installation of a building sewer shall be open trench work unless otherwise approved by the Superintendent. Pipe laying and backfill shall be performed in accordance with ASTM specification C12-19 except that no backfill shall be placed until the work has been inspected.

D. All joints and connections shall be made gas tight and water tight.

E. Other jointing materials and methods may be used if approved by the Superintendent subject to the North Carolina Building Code, Volume II - Plumbing.

F. The connection of the building sewer into the public sanitary sewer shall be made at the Y branch, if such branch is available at a suitable location. If the public sewer is twelve (12") inches in diameter or less, and no properly located Y branch is available, the owner shall, at his expense, install a Y branch in the public sewer at the location specified by the Superintendent.

G. Where the public sewer is greater than twelve inches (12") in diameter, and no properly

located Y branch is available, a neat hole may be cut into the public sewer to receive the building sewer, with entry in the downstream direction at an angle of about forty-five (45) degrees. A forty-five (45) degree ell may be used to make such connection, with the spigot end cut so as not to extend past the inner surface of the public sewer. The invert of the building sewer at the point of connection shall be at the same or at a higher elevation than the invert of the public sewer. A smooth, neat joint shall be made and the connection made secure and watertight by encasement in concrete. Special fittings may be used for the connection only when approved by the Superintendent.

Section 4-23. Standards.

The following shall be used as a standard for design and construction of a sewer system connected to the Town of Boone System. Failure to follow these standards shall be sufficient grounds for the Town to deny service.

A. Sewer System Specifications.

1. Ductile Iron Pipe.

All ductile iron pipe shall be in accordance with AWWA C-151 latest revision (ANSI A21.51) and shall be in 18 to 20-foot lengths with single rubber gasket (push on) joints in accordance with AWWA C-111 latest revision (ANSI A21.11). All 8-inch pipe will be minimum Class 50 in accordance with AWWA C-150 latest revision (ANSI A21.50).

2. Polyvinyl Chloride Gravity Sewer Pipe (PVC).

PVC gravity sanitary sewer pipe and related fittings shall be manufactured in accordance with all requirements of ASTM C3034, SDR 35, Type PSM polyvinyl chloride sewer pipe and fittings. PVC gravity sewer pipe shall be used for 8, 10, 12, or 15-inch mains and shall be supplied in 12.5 foot lengths with bell-and-spigot joints. All fittings shall use rubber gaskets which conform to the requirements of ASTM F477.

3. Steel Pipe.

a. Steel pipe for aerial creek crossings or boring installations (without encasement and carrier pipe) shall be high strength steel, spiral welded or smooth-wall seamless manufactured in accordance with ASTM A139 and A283 and consisting of grade B steel with a minimum yield strength of 35,000 psi. On 8- and 10-inch pipe, the minimum wall thickness shall be 0.375 inches.

b. The outside of the pipe shall have one coat of zinc chromate primer

conforming to Federal Specification TT-86a and afterwards painted with a compatible black paint.

c. Pipe ends shall be right-angled and shall be compatible to receive a dresser style 62 - type I or approved equal mechanical transition coupler.

d. Steel encasement pipe shall be spiral welded or smooth-wall seamless, consisting of grade B steel with a minimum yield strength of 35,000 psi and manufactured in accordance with ASTM A139 and A283.

e. The pipe thickness shall be as required by the encroachment agreement obtained from the controlling agency, but in no case be less than 0.250 inches and the ends shall be beveled and prepared for field welding at the circumferential joints. Thicker encasement pipe may be required by the North Carolina Department of Transportation, Railroads or other agencies.

f. The pipe shall be coated inside and outside, in accordance with AWWA C-203 or the N.C. Department of Transportation or the American Railway Engineering Associations specifications. All encasement pipe must be approved by the appropriate controlling agency (i.e., NCDOT, RR, etc.) prior to ordering the materials.

g. If the encasement pipe is used to carry a sewer main, then a vent pipe shall be installed. The vent pipe shall be made from ASTM A139 and A283, grade B steel, with a minimum yield strength of 35,000 psi and coated as described above. The vent pipe location shall be approved by the appropriate agency prior to installation.

h. All carrier piping shall be slip joint ductile iron and the minimum inside diameter casing shall be eight (8) inches greater than the outside dimension of the carrier pipe as follows:

Carrier Pipe Inside Diameter	Steel Casing Pipe Minimum Inside Diameter
4 inch	12 inch
6 inch	12 inch
8 inch	16 inch
12 inch	24 inch
16 inch	30 inch

4. Manholes.

a. Manholes shall be manufactured in accordance with ASTM C478 and shall

be precast with monolithic base and eccentric cone. All manholes will be a 40" inside diameter with 5 inch walls or 50" with 6 inch thick walls and have a 6 inch minimum base.

b. All manholes over 100" deep (top rim to lowest point) shall be 50" diameter. All manholes with 21 inch or larger pipes will be 50". The standard joint shall be sealed with plastic cement putty meeting Federal Specifications SS-C-153. O ring joints shall conform to the requirements of ASTM C443. A rubber water stop shall be supplied with the manholes to tie the pipe to the barrel section. These gaskets and clamps shall meet the requirements of ASTM C923.

c. Manholes deeper than 30" shall have steps. Manhole steps will be press set plastic, or approved equal. Steps will also be provided on the outside of raised manholes when the top elevation is greater than three (3) feet above the existing ground elevation.

d. All commercial and industrial discharges shall provide a monitoring manhole easily accessible and in accordance with Town of Boone Ordinances, Section XX-XX. All discharge from the property must pass through one monitoring manhole before entering the public sewer system.

5. Manhole Rings and Covers.

a. Manhole rings and covers will be Dewey Brothers MHRCR-2001 for all off-street locations and Dewey Brothers MHRCR-2001-EC for all in-street locations. All covers will be perforated and marked SEWER unless otherwise required by the Director of Public Utilities or these specifications.

b. Manholes located in off-street locations shall be extended one foot above finished grade. Manholes in flood plains shall extend two (2) feet above the 100-year flood elevation or be provided with sealed covers and vented.

6. Service Connections to Sewer System.

Where sewer lines are already in place, the Town will tap the sewer line. Where taps are made at the time of installation of the sewer, the following shall apply:

a. Where feasible, service connections shall be made into the nearest manhole. Connections into manholes shall be by cored holes into the manhole and the lateral shall be grouted watertight.

b. Where making a service connection directly to the main line, the following shall apply:

1. On PVC, provide wye fittings at location of service connection.

2. On PVC, cut hole in pipe using appropriate saw, glue and clamp service saddle over hole.

c. The lateral shall be installed from the main line to the edge of the right-of-way or beyond the limits of pavement. The location of the end of the lateral shall be marked with a steel post painted yellow for easy identification.

d. The service connection shall be located by distances from manhole to manhole. The distances shall be recorded on a reproducible medium and submitted to the Town for their records.

e. Sewer laterals shall be a minimum of 4" diameter PVC SDR35.

7. Sanitary Sewer Design Criteria.

a. Sanitary sewer plans and specifications shall be sealed by a Professional Engineer, licensed to practice in North Carolina.

b. Minimum manhole depth shall be four (4) feet.

c. Minimum pipe size shall be eight (8) inch diameter.

d. Minimum slope on an eight (8) inch pipe shall be 0.5%. Maximum slope shall be 15.0%.

e. Minimum velocity shall be 2 fps.

f. Minimum cover shall be 3.0 feet, unless ductile iron pipe is used.

g. Maximum cover shall be 18 feet, unless ductile iron pipe is used.

h. Manholes in off-street locations shall be extended one (1) foot minimum above finished grade.

i. Manholes shall extend two (2) feet above the 100-year flood plain elevation or be sealed cover and vented two (2) feet above the 100-year flood elevation. If the 100-year flood elevation cannot be readily established, the Director of Public Utilities shall establish the elevation to which the manhole rims or stack shall be extended.

j. Horizontal and vertical alignment between manholes shall be straight.

k. Provide a 0.2' drop through a manhole.

l. Maximum distance between manholes shall be 400 feet.

m. Use drop manhole where difference between incoming and outgoing pipe inverts is 24" or greater.

n. Provide wye with lateral to the property line and plug for each lot in a subdivision. Provide metal post painted yellow extending at least three (3) feet above ground to mark end of lateral.

o. Separate water lines ten (10) feet horizontal distance from sewer lines (existing or proposed) or keep water line 18 inches clear above sewer line. Where 18 inches clear vertically cannot be maintained below or above the sewer line, both lines shall be mechanical joint ductile iron a minimum of ten (10) feet on either side of the crossing. Center the crossing at the center of the pipe, both lines.

p. Sewer lines shall have a 25' permanent easement (12.5' each side of center line) in the Towns name. A 50' construction easement (25' each side of center line, unless directed otherwise) shall be provided.

8. Sanitary Sewer Plans Checklist.

Sanitary sewer plans shall contain the following minimum information:

a. Plan and profile on 24" x 36" page.

b. Vertical sea level elevation scale on left of profile and station numbers along bottom of profile.

c. North arrow, all sheets.

d. Plan and profile both run left to right.

e. Centerline intersections of line crossings with sewer noted on profile.

f. Street names above or below corresponding profile, when more than one street is on a page.

g. Identify location of drop manholes in both plan and profile.

h. Invent elevations of all proposed and all existing pipes and pipe sizes entering and leaving all manholes to 0.01' on profile.

i. Rim elevation and vent elevation to 0.1' on profile; existing and proposed grades.

j. Pipe grade to 0.01% and size and type of pipe between manholes.

k. Size and type of existing pipe and direction of flow between each manhole on plan.

l. Station numbers and designation of Existing or New on each manhole on plan and profile.

m. Indication of identical manholes where profile is broken.

n. Location and size of all existing and proposed street and sewer rights-of-way.

o. Existing pavement on plan, indicate width, and any portion to be cut.

p. Where a line is to be bored indicate location and length of casing and type of pipe on plan and profile.

q. All existing underground utilities in the area.

r. Where ductile iron is to be used, indicate limits on plan and profile. Show shaded on profile.

s. Use ductile iron where storm drain and sewer have less than two(2) feet vertical clearance.

t. On aerial crossings, use concrete piers at 18' intervals, indicate on plans and profile, include details of design for the piers and anchorage.

u. Total distance between existing manholes or proposed manholes on the plan and the bearing if the line is not within the street right-of-way.

v. All lot lines.

w. All street names on plan.

x. Flood plain elevation in all flood plain areas.

y. Creek flow line.

z. All railroad crossings must be accompanied by a separate encroachment map showing plan and profile and all other information required by the railroad

in accordance with their standards.

aa. Registered Engineers seal and signature.

bb. Vicinity map showing the location of lines and a visual index of plan sheets.

B. Installation Specifications.

1. Clearing.

Where the lines are to be constructed in wooded areas, permanent easements shall be fully cleared. Cleared materials shall be disposed of off of the construction site. Disposal shall be made in accordance with all local and state laws. Trees cut down on the construction site will be hauled away from the site for proper disposal. Stumps of all trees cut down outside of the excavation area shall be removed. Ground surfaces shall be graded so as to promote proper drainage and allow mowing by vehicular equipment.

2. Site Grading.

All rough grading shall be completed prior to the installation of the sewers and appurtenances.

3. Earthwork.

a. Explosives and Blasting. Explosives for blasting shall be stored, handled and used in accordance with the North Carolina Department of Transportation Standard Specifications latest revision, all local regulations, and practices outlined in the Blasters Handbook published by E.I. Dupont de Nemours and Company, Inc. Blasting shall be conducted so as not to endanger persons or property, and shall be covered or otherwise satisfactorily confined. The blaster shall be responsible for, and shall make good, any damage of whatever nature caused by blasting or accidental explosions.

b. The bottom of all excavations shall be free from water when pipe is laid in the excavation, when concrete is placed and until work is carried above the groundwater level and is safe from flotation. If any of the subgrade or underlying materials is disturbed by movement of groundwater, surface water or any other reason, it shall be replaced with crushed stone or gravel.

4. Clean-Up of Site.

At the completion of the work, all debris and excess construction materials shall be removed and the right-of-way shall be left clean and presentable.

5. Materials.

a. Select Backfill.

Select backfill material shall contain no man-made or organic material or clay pockets and shall be free of rocks, clods or other materials larger than two(2) inches in nominal diameter. Materials from on-site excavations may be used for select backfill provided they meet the specific requirements and contain optimum moisture content for proper compaction. Water saturated material shall not be used as select material.If sufficient on-site select backfill material is not available, acceptable material from an off-site borrow area shall be secured.

b. Backfill.

Backfill shall be free of all organic materials and shall not contain any rocks larger than four (4) inches in diameter, or be in a water saturated condition.

c. Crushed Stone or Screened Gravel.

Crushed stone or screened gravel shall meet the requirements of the North Carolina Department of Transportation Standard Specifications (latest revision). Crushed stone or screened gravel shall conform to standard size No. 5. Any rock excavated on site which meets this graduation may be used. Specifically, the stone shall meet the following gradation:

Sieve Size	Percentage Dry Weight Passing Designated Sieve Size
1-1/2 inch	100
1 inch	90 - 100
3/4 inch	20 - 55
1/2 inch	0 - 10
3/8 inch	0 - 5
No. 200	0 - 0.6

d. Pipe Bedding.

All materials used for pipe bedding shall conform to North Carolina Department of Transportation Standard Specifications (latest revision) for standard size 67 material. Any rock, run-of-bank sand, or gravel excavated on site which meets the following gradation may be used.

Percentage Dry Weight

Sieve Size	Passing Designated Sieve Size
1 inch	100
3/4 inch	90 - 100
3/8 inch	20 - 55
No. 4	0 - 10
No. 8	0 - 5
No. 200	0 - 0.6

e. Riprap.

The stone for riprap shall consist of field stone or rough unhewn quarry stone. The stone shall be sound, tough, dense and resistant to the action of air and water. The riprap shall be Class I as specified in the NCDOT Standard Specifications (latest revision). The stone shall vary in weight from 5 to 200 pounds. At least thirty (30) percent of the total weight of the riprap shall be in individual pieces weighing a minimum of sixty (60) pounds each. Not more than ten(10) percent of the total weight of the riprap may be in individual pieces weighing less than fifteen (15) pounds.

6. Excavation.

a. General.

All excavation shall be made in such a manner, and to such widths, as will give ample room for properly constructing and inspecting the structures they are to contain, and for such sheeting, timbering, pumping and draining as may be required within the limits shown in Standard NPW-2. Except where otherwise specified, excavation slopes shall be flat enough to avoid slides that will cause disturbance of the subgrade, or damage to adjacent areas. Intercept and collect surface runoff both at the top and bottom of cut slopes. All excess excavated material and all excavated material which is unsuitable shall be removed from the site and replaced with suitable material.

b. Sheeting and Bracing.

Place and maintain such sheeting and bracing as may be required to support the sides of the excavation or to protect pipes and structures from possible damage, and to provide safe working conditions. The contractor shall be responsible for the adequacy of all sheeting and bracing used, and for all damage resulting from sheeting and bracing failure or from placing, maintaining and removing it. All sheeting and bracing shall be removed upon completion of work. The Town may permit sheeting to be left in place at the request and expense of others for the purpose of preventing injury to

structures or property. Any sheeting or bracing left in place shall be cut off at least two (2) feet below the finished ground surface.

c. Rock Excavation.

All rock encountered within the limits of excavation shall be excavated. Rock shall be excavated so that generally there will be a clear space of at least twelve (12) inches from the outside barrel of the pipe to the side of the trench. Isolated points of rock shall not come nearer than six (6) inches to the pipe. At the trench bottom, the rock shall not come nearer than six (6) inches to the pipe. In addition, sufficient rock shall be removed at joints to facilitate proper installation. Rock shall be fully removed at least fifteen (15) feet in advance of the laying of the pipe.

d. Protection of Subgrade for All Excavations.

To minimize the disturbance of the bearing materials and provide a firm foundation:

1. Excavation shall be carried out below subgrade in limited areas, should disturbed soil or material with natural low bearing capacity be encountered. Stabilizing of these areas shall be done with select backfill or coarse aggregate as required. Soils disturbed through the operations shall be excavated and replaced with select backfill or coarse aggregate, as required.

2. Provide positive protection against penetration of frost into materials below the bearing level during work in winter months.

7. Backfilling.

a. Backfill shall be placed in maximum eight (8) inch lits and compacted with tampers to 95 percent of Standard Proctor AASHTO-99 density, except backfill under structures, which shall be compacted to 98 percent of Standard Proctor Density. Backfill in the roadways shall be tamped to NCDOT requirements.

b. Pipe trenches shall be backfilled as soon as possible after pipe installation.

c. Where sheeting is used, use all reasonable measures to prevent the loss of support of the pipe or backfill when the sheeting is removed. If significant volumes of soil cannot be prevented from clinging to the extracted sheets, the voids shall be continuously backfilled as rapidly as possible. Thereafter, limit the depth below subgrade that sheeting will be driven in similar soil

conditions or employ other appropriate means to prevent a loss of pipe support. Sheeting embedded in granular fill or backfill materials shall be left in place.

8. Pipe Laying.

Pipe laying shall in all instances be accomplished in a workmanlike manner laid true in line and grade with bell ends facing (up-grade) in the direction of laying. The various pipes shall be handled, belled-up and laid in accordance with manufacturers requirements and good engineering practices.

9. Pipe Bedding.

a. Shaped Bottom Bedding (NPW-1): Shall be so the pipe bears uniformly upon undisturbed native earth. Soil is then backfilled and tamped by hand around the pipe (and completely under the pipe haunches) in uniform layers not exceeding six (6) inches in depth to 10" above the top of pipe. Each 6" layer shall then be placed, then carefully (so as not to disturb or damage the pipe) and uniformly tamped, eliminating the possibility of lateral movement.

b. Type II - Granular Material Embedment (NPW-3): Shall be when the trench bottom is undercut a minimum of six (6) inches below the pipe barrel grade and filled with an approved stone as shown in the standard details.

c. Type III - Granular Material Embedment (NPW-4): Shall be when the trench bottom is undercut a minimum of six (6) inches below the pipe barrel grade and filled with an approved stone to an elevation such that the pipe will be completely and uniformly bedded.

d. Concrete Encasement and Cradles (NPW-5): Shall be as shown in the Standard Details.

10. Installation Limitations.

The following are limitations and bedding requirements for supportive strength and shall be adhered to at all times.

a. 6- and 8-inch Pipe: Installation of 8-inch PVC pipe with more than fourteen (14) feet of cover use Type II, Granular Embedment.

b. 10-inch and 12-inch Pipe: Installation of 10-inch and 12-inch PVC pipe with more than twelve (12) feet of cover, use Type II, Granular Embedment.

c. Ductile Iron Pipe: Installation of Ductile Iron Pipe with more than twenty

(20) feet of cover, use Type II, Granular Embedment; more than thirty (30) feet of cover, use Type III, Granular Embedment. This is regardless of ground water and/or soil conditions. In areas having 2.50 feet and less or 18.0 feet and more of cover, use Ductile Iron Pipe.

11. Portland Cement Concrete.

a. Acceptance of Concrete: The Director of Public Utilities shall require all and as many tests as he deems necessary to insure the concrete acceptability. The cost of the test shall be at the suppliers or contractors expense.

b. Depositing: Concrete will not be used if it cannot be placed within ninety (90) minutes of the dispatch time. Concrete shall be deposited in such a manner so as to prevent contamination by foreign material and segregation due to rehandling or flowing. Segregated concrete and/or concrete consisting of foreign material will not be used. Depositing will not be done when temperature has not exceeded 35 degrees Fahrenheit and rising by 10:00 a.m. Concreting shall cease when the descending air temperature in the shade falls below 40 degrees Fahrenheit. It shall not resume until the ascending air temperature rises to 35 degrees Fahrenheit. All concrete shall be kept from freezing. Frozen concrete shall be replaced. Free fall shall not exceed three (3) feet in any case.

c. Forms: Forms may be made of wood, plywood, metal or any other suitable material. Forms shall be mortar tight, of material strong enough to resist noticeable deflection or bulging between supports, and the interior dimensions of the forms shall be such that the finished concrete shall be of the proper form and dimensions. The design of the forms shall take into account the effect of vibration of concrete as it is placed and also the rate of speed at which the forms will be filled. Mechanical vibrators, of an approved type, and continuous spading and/or rodding of concrete shall be used to produce proper contact of concrete with forms and reinforcing steel in piers and with forms and pipe in monolithic inverts insuring a compact, dense and impervious artificial stone of uniform texture.

d. Curing: All concrete shall be cured by one of the following methods:

1. Forms left in place for a period of seven (7) days. Exposed concrete shall be moist cured.

2. Moist curing performed when forms are removed before seven (7) days. All construction joints shall be moist cured.

3. Curing compound used immediately after forms are removed and all

surface water has disappeared.

e. Finishing: The structure shall have a uniform and textured surface. All form marks exposed to view shall be rubbed off with a stone.

12. Testing.

Testing is required on all lines and shall be done in the presence of the Director of Public Utilities or his representative. A minimum of 48 hours notice shall be given to the Director of Public Utilities before testing begins unless other schedules can be arranged. All testing and disinfection shall be completed prior to connection to any existing line.

a. Sewer Line Testing. Infiltration: The installer of the sewer line shall check the lines for infiltration or exfiltration before they are put in service. Infiltration in excess of two hundred (200) gallons per day per inch-mile of sewer will result in having the Contractor go over the lines, ascertain where the leakage exists, and repair the lines to the extend necessary to bring the infiltration down within acceptable limits. If exfiltration testing is required or necessary, an allowance of an additional ten (10) percent of gallonage shall be permitted for each additional two (2) feet head over a basic two (2) foot minimum internal head. The Contractor shall test only pipe of the same diameter and maximum length of one mile at a time. All testing herein shall be satisfactorily completed prior to connecting to the existing sewer system. In lieu of the infiltration or exfiltration testing, an air test can be conducted. Air testing shall be in accordance with the latest revisions of the ASTM standards.

13. Final Grading and Landscaping.

a. General.

Fertilizing, seeding and mulching of any and all areas disturbed during construction will follow within ten (10) working days of the installation of each pipe run (being from manhole to manhole or 300 feet of water line). All plantings shall be maintained by the installer for a period of one (1) year after the completion of the work.

b. Materials.

Lawn fertilizer shall be a complete fertilizer with components derived from organic sources and shall contain the following percentages by weight:Type 10-10-1010% Nitrogen (Ureaform)10% Phosphoric Acid10% Potash. One quarter of the nitrogen shall be in the form of nitrates, one quarter in the form

of ammonia salts, and one half in the form of natural organic nitrogen. Available phosphoric acid to be free from superphosphate, bone, or tankage. Potash shall be sulphate or potash. Elements shall conform to the standards of the Association of Official Chemists.

1. Storage - Commercial fertilizer shall be stored in weatherproof storage areas and in such a manner that effectiveness will not be impaired.

2. Ground Limestone - At least fifty (50%) percent shall pass a No. 200 U.S.S. mesh sieve. At least ninety (90%) percent shall pass a No. 100 U.S.S. mesh sieve. One hundred percent (100%) shall pass a No. 10 U.S.S. mesh sieve. Total carbonates shall not be less than eighty (80%) percent of 44.8% Calcium Oxide equivalent; for purposes of calculation, total carbonates shall be considered as Calcium Carbonate.

3. Grass Seed - Grass seed shall be New Crop mechanically mixed seeds in the following seed mixture proportions:

% Mixture	Seed Variety	%Purity	%Germination
80	Kentucky 31	98	97
20	Kentucky Bluegrass	98	85

c. Seed Bed Preparation.

The seed bed shall be prepared by pulverizing the soil to a depth of three (3) inches. Good surface drainage must be provided, allowances for settlement made and ground elevations adjusted accordingly. Visible ponding will not be allowed. All stones, roots, sticks, rubbish and other objectionable material shall be removed.

d. Soil Improvements.

Soil additives shall be applied incorporated in an approved manner into the topsoil at the following rates:

1. Fertilizer - 30 lbs. per 1000 square feet of 10-10-10 fertilizer.

2. Lime - 100 lbs. per 100 square feet.

3. Superphosphate (0.20.0) - 12 lbs. per 1000 square feet.

e. Seeding.

The seed bed must be in good, friable condition and has not become muddy or hard at the time seeding is to be performed. Seed shall be applied at the rate of 8 lbs./1000 square feet and raked or tilled into the topsoil with the resulting furroughs running across the natural slope of the ground.

f. Mulching.

1. Dried straw shall be uniformly spread (approximately 1/4 of the ground should remain visible to avoid smothering seedlings) over the area at the rate of 90 lbs. per 1000 square feet. The straw shall be sprayed with liquid asphalt to bond it together and anchor it in place.

2. Liquid asphalt (thinned with kerosene) used during freezing weather shall be either rapid or medium curing, applied at a rate of 200 gallons per ton of straw (approximately 9 gallons per 1000 square feet).

3. Emulsified asphalt (thinned with water) used when temperatures are less severe shall be rapid curing only, applied at a rate of 150 gallons per ton of straw (approximately 7 gallons per 1000 square feet).

g. Maintenance.

Maintenance shall consist of watering, weed and pest control (within established lawns), fertilization, erosion repair, reseeding and all else necessary to establish a vigorous health and uniform stand of grass. All areas and spots which do not show a uniform stand of grass, for any reason, shall be treated repeatedly until a uniform stand is attained.

14. Erosion and Sedimentation Control Measures.

a. All work shall be done in accordance with and subject to the limitations of the N.C. Rules and Regulations for Erosion and Sediment Control.

b. It shall be the responsibility of the installer of the system to obtain approval of a sedimentation and erosion control plan from the N.C. Department of Natural Resources and Community Development prior to land disturbing activities.

c. All erosion control measures shall be maintained until no longer required for sediment control, at which time they shall be dismantled and removed from site.

C. Pump Stations.

1. General.

The developer shall furnish and install two (2) submersible non-clog sewage pumps to deliver adequate GPM against a total head to be determined by an engineering firm. The pump discharge size shall be 4".

2. Pumps.

Two (2) effluent pumps shall be furnished with the system. The pumps shall have a TDH, to be determined by an engineering firm, to deliver adequate GPM. The pumps shall be complete with power cable and pump removal system.

3. Controls.

a. A weatherproof NEMA 3R control panel shall be mounted in the location shown on the plans. Mounted in the cover of the panel shall be H-O-A switches, run lights and elapsed time counters for pumps No. 1 and 2 and a high water alarm light and audible alarm. The panel shall be situated such that the alarm light can be easily observed. The alarms shall be powered on a separate circuit from that providing power to the pumps. A 115 VAC ground fault weatherproof receptacle shall be provided outside the control panel. A 20 amp breaker shall be supplied in the panel for this receptacle. An adequately sized 115 VAC transformer shall be supplied for all control receptacle voltage.

b. The control panel shall contain all the necessary equipment to control and alternate the two pumps. The pumps will be operated using the wastewater level in the wet well. Three (3) mercury float switches shall be utilized in the wet well: Pump Off, Lead Pump On, Lag Pump On, and High Water Alarm.

c. The panel and all control equipment shall be properly protected against damage resulting from lightning and intense solar heating. Wiring from the control panel to the pumps shall be contained in waterproof, gas proof, conduits with no splices inside the pump chamber. No junction boxes will be allowed inside the wet well. Wiring for the pumps and level controls will be continuous with no splices from the floats to the control panel. Electric cables will be supported in wet well by clamps and a cable holder attached to the opening.

4. Guide Rail Installation.

a. A lift-out rail assembly shall permit easy removal and installation of the pump and lower check valve without the necessity of personnel entering the basin. Cast iron guide brackets with guide yokes of sufficient bearing strength to prevent binding shall bolt to the pump. The yokes shall mate over guide rails of a minimum of 1" galvanized pipe running between an upper rail support casting. A lower discharge nozzle, downstream from the check valve, shall be guided into a chambered cavity in the discharge casing. A shoulder on the nozzle shall bottom on the discharge casting when the pump is properly located and shims shall not be required to insure alignment for a leak tight seal. Dual O rings shall effect a hydraulic seal around the nozzle when it is in its operating position. A brace, easily removable from the top of each basin, shall be provided to lock the parts together, preventing line surges from breaking the seal and allowing leakage. The discharge case shall have a tapped discharge opening with piping to a coupling through the basin wall.

b. The discharge case shall be securely bolted to the basin floor and arranged in such a way that slight deflection caused by the discharge pipe will not cause the quick-connect pump flange to leak.

c. A lifting chain shall be securely fastened to the top of the pump and to the top of the basin to facilitate removal of the pump. The chain shall be a minimum of 1/4" welded link type, or of adequate strength required to effectively support the weight of the pump assembly while removing and installing.

5. Wet Well.

a. Each wet well shall be constructed of precast concrete and shall meet the dimension requirements noted on the plans. Each precast wet well shall be furnished and installed as specified herein.

b. Excavation shall be made to the required depth and the foundation on which the wet well is to be set shall be approved by the Engineer. The excavation shall include the removal of obstructions and unsuitable materials for a good foundation. The excavation shall allow for a minimum of twelve (12) inch thick bedding of crushed stone under the wet well to a width one foot wider than the outside wall of the wet well.

c. The base, barrel and flat top slab of the wet well shall be constructed from precast, reinforced sections, staked to form the wet well and manufactured according to the latest revision of ASTM C-478 and AASHTO M-199. Sections shall be joined with mastic material and grouted to provide a watertight connection. Penetrations for the piping shall be made by using

flexible connectors made of high quality rubber or synthetic rubber which is precast into the sections; or provide a watertight connection by applying a waterproof grout to all sections disturbed in the installation process. All work in the wet well shall be inspected and approved by the Engineer.

6. Baskets.

Baskets shall meet the outlines and specifications as noted in Standard TOB - 26.

D. Standard Details. See **Appendix A.**

Section 4-24. Unauthorized Connections.

No person(s) shall connect roof downspouts, foundation drains, areaway drains, or other sources of surface runoff or groundwater directly or indirectly to a public sanitary sewer without specific written approval from the Superintendent.

Section 4-25. Requirements of Connections.

The connection of the building sewer into the public sewer shall conform to the requirements of the building and plumbing code or other applicable rules and regulations of the State of North Carolina. Any deviation from the prescribed procedures and materials must be approved by the Superintendent before installation.

Section 4-26. Inspection of Sewer.

The applicant for the building sewer permit shall notify the Superintendent when the building sewer is ready for inspection and connection to the public sewer. The connection and testing shall be made under the supervision of the Superintendent or his representative.

Section 4-27. Excavations.

All excavations for building sewer installation shall be adequately guarded with barricades and lights so as to protect the public from hazard. Streets, sidewalks, parkways and other public property disturbed in the course of the work shall be restored in a manner satisfactory to the local government.

Section 4-28. Owner Maintenance Requirements.

It shall be the responsibility of the property owner to keep and maintain the building sewer connected to the public sewer in good repair. The owner shall be responsible for making necessary repairs, at his own expense, to the building sewer when notified in writing by the local government that repairs are necessary. Should the owner fail to repair the building sewer within sixty (60) days after receiving written notification by the local government that such repairs are necessary, the local

government may make the necessary repairs to the building sewer and shall assess the owner for the cost of the repairs.

Section 4-29. Reserved.

Section 4-30. Vandalism of Wastewater Disposal System.

No person(s) shall maliciously, willfully, or negligently break, damage, destroy, uncover, deface or tamper with any structure, appurtenance or equipment which is a part of the wastewater disposal system. Any person(s) violating this provision shall be subject to immediate arrest under charge of disorderly conduct.

Section 4-31. Powers and Authority of Inspectors.

The Superintendent and other duly authorized employees of the local government bearing proper credentials and identification shall be permitted to enter all properties for the purposes of inspection, observation measurement, sampling and testing pertinent to discharge to the public sewer in accordance with the provisions of this ordinance upon due notice.

A. Obtaining Information.

The Superintendent or other duly authorized employees are authorized to obtain information concerning industrial processes which have a direct bearing on the kind and source of discharge to the wastewater disposal system. The industry may withhold information considered confidential. The industry must establish that the revelation to the public of the information in question might result in an advantage to competitors.

B. Safety Rules and Regulations.

While performing the necessary work on private properties, the Superintendent or duly authorized employees of the local government shall observe all safety rules applicable to the premises establishment by the company; and the company shall be held harmless for injury or death to local government employees; and the local government shall indemnify the company against loss or damage to its property by local government employees and against liability claims and demands for personal injury, or property damage asserted against the company and growing out of the gauging and sampling operation, except as such may be caused by negligence or failure of the company to maintain safe conditions.

C. Entrance Permitted.

The Superintendent or other duly authorized employees of the local government bearing proper credentials and identification shall be permitted to enter, upon due notice, all private properties through which the local government holds a duly negotiated easement for the purposes of but not limited to inspection, observation, measurement, sampling, repair and

maintenance of any portion of the wastewater facilities lying within said easement. All entry and subsequent work, if any, on said easement, shall be done in full accordance with the terms of the duly negotiated easement pertaining to the private property involved.

Section 4-32 Penalties.

Any person, industry, commercial activity, institution or other type of business found to be violating any provision of this Ordinance except Section 4-31 shall be subject to a civil penalty in the amount of $200.00 to be recovered by the Town. If the Town of Boone determines that the violation is of such a serious nature that a larger penalty is warranted, the Town of Boone shall have the right to assess a civil penalty of up to One Thousand Dollars ($1000.00) for each offense. Such assessments may be added to the Users next scheduled sewer service charges and the POTW shall have such remedies for the collection of such assessments as it has for collection of other service charges. Violators shall be issued written notice of the violation which must be paid within 72 hours after receipt of said notice. If the violator does not pay the penalty within 72 hours, the Town may recover such penalty and all subsequently accruing penalties, in a civil action.

A. Continuing Violation.

Each days continuing violation of any section of this Ordinance except Section 4-31 shall be a separate and distinct offense.

B. Violation of Ordinance.

Any person, industry, commercial activity, institution or other type of business found violating any provision of this Ordinance shall become liable to the Town for any expense, loss or damage incurred by the Town due to said violation.

C. Court of Competent Jurisdiction.

Notwithstanding Sections A and B above, this Ordinance may also be enforced by appropriate equitable remedies issued from a Court of competent jurisdiction.

Section 4-33. Establishment of Revenue System.

A User charge shall be assessed to all users by the local government in accordance with the provisions of the ordinance. Previous unit charges levied by ordinance for the operation, maintenance and replacement of the wastewater disposal system are hereby repealed. The local government may, under applicable statutes of the State of North Carolina and Town Ordinances, levy ad valorem taxes for the general obligation bond principal and interest payment and any other provided by law not related to the operation, maintenance and replacement of the works of the system.

A. User Charge System Biannual Review

The local government shall, not less frequently than biannually, prepare an estimate of anticipated costs for each category of user charge for the forthcoming fiscal year(s). These estimates shall be made in the form of a rate ordinance and shall be proposed to the local government for enactment.

B. User Charge Preempts

The user charge system shall take precedence over any terms or conditions of agreements or contracts which are inconsistent with the requirements of Section 204(b)(1)(A) of the Clean Water Act.

C. Basis of User Charge

The unit charges for debt service, operation, maintenance and routine replacement shall consist of a fixed monthly capacity charge and a variable charge based on usage. The fixed monthly capacity charge shall include an allowance for operation and maintenance costs resulting from extraneous flows(i.e., inflow & infiltration). User rates in effect shall be those established and approved by the Town Council of the Town of Boone. All users shall be notified, at least annually and in conjunction with their regular bill, of the rate for the user charge which is attributable to the wastewater treatment services.

D. Sewer Financial Controls

The user charge system shall include financial control methodology adequate to accurately account for all revenues generated and expenditures incurred as a result of operation of the POTW. Surcharges will be assessed to each user discharging excessive strength wastewater or toxic wastewater which causes an increase in the cost of managing the effluent or sludge from the POTW. Surcharges shall be established in accordance with Section 8-14. (See also Appendix D for User Charge Methodology). Decreasing block rates will not be used nor will customers outside the corporate limits be charged higher rates without identifying the costs used to justify the higher rates.

Section 4-34 to 4-36. Reserved.

ARTICLE V
USER PENALTIES FOR SEWER SYSTEM

Section 5-1. Findings and Declaration of Policy.

The Town Council hereby finds that Article IV of this Ordinance which provides for a system of charges for users of the sewage collection and treatment works, requires the adoption of an Ordinance not less frequently than biannually to establish unit charges under the user charge system and the industrial cost recovery system.

Section 5-2. Reserved.

Section 5-3. Rates in Effect.

The unit charges for debt service, operation, maintenance and routine replacement shall consist of a fixed monthly capacity charge and a variable charge based on usage. The rates currently in effect and approved by the Town Council of the Town of Boone shall be applied to all users.

Section 5-4. Excessive Strength Wastewater.

The unit charge for wastewater of excessive strength shall be:

A. $0.0376 per pound of Biochemical Oxygen Demand (BOD) in excess of that contained in the volume of wastewater with a BOD concentration of four hundred (400) mg/l.

B. $0.0433 per pound of Total Suspended Solids (TSS) in excess of that contained in the volume of wastewater with a TSS concentration of four hundred (400) mg/l.

Section 5-5. Toxic Rates.

The unit charge for toxics shall be developed by the Town Manager for each specific applicable user.

Section 5-6. Monitoring Rate.

The unit charge for monitoring shall be developed by the Town Manager for each specific applicable user.

ARTICLE VI
WATER AND SEWER EXTENSIONS

Section 6-1. General.

The intent of this ordinance is to set forth a standard procedure whereby water and sewer mains may be extended where no mains are presently laid. It is the further intent of this Ordinance to provide, where specifically stipulated, a cost-sharing plan between the person or persons requesting the extension and the Town of Boone.It is not the intent of this Ordinance to limit the Town from making any water and sewer extensions it deems necessary for the best interest of the Town of Boone. Approval of any extension requiring financial participation by the Town shall always be based on the Towns determination that funds are available.

Section 6-2. Extensions to Mains and Services.

No water or sewer main extension, or service to property from existing water or sewer mains, will be made to or within developments inside the Town limits or within the Towns extraterritorial limits, that are not consistent with the planning, zoning, and development requirements of the Town of Boone.

A. Water distribution lines to serve undeveloped subdivisions will be handled as follows:

1. The developer will submit plans for review and approval by the Town, its engineer, the North Carolina Department of Human Resources, and the North Carolina Department of Natural Resources and Community Development.

2. Lines will be installed in accordance with the approved plans.

B. Other extensions:

Extensions of water lines within the Towns service area will be handled as follows:

1. The plans for the extension will be submitted for review and approval by the Town, its engineer, the North Carolina Department of Human Resources and the North Carolina Department of Natural Resources and Community Development.

2. The lines will be installed in accordance with the approved plans.

Section 6-3. Extensions of Service to Developed Property Within the Town.

Upon request of a property owner whose in-Town property is not served by a water or sewer line, the Town, at its expense, shall extend its water and sewer lines to serve such property unless it determines that such extension is unreasonable for the following reasons:

A. The cost of service extensions is excessive in terms of the number of customers to be served or because of topographical engineering, technical or other problems;

B. The provision of service will adversely affect the supply of water to other customers;

C. Other good and sufficient reason.

Section 6-4. In-Town Extensions to and Within New Subdivisions and Other New Developments.

A. As indicated in Section 3, the Town will extend its water and sewer lines to already developed properties within the Town. However, the responsibility for extending water and sewer lines to and within new subdivisions or to and within other new developments lies with the subdivider or developer.

B. The cost of extending water or sewer lines within new subdivisions or other new developments shall be borne by the subdivider or developer, except that if the Town requires water lines within a subdivision or other new development that are larger than those necessary to serve the project and are so located to serve other properties, the Town shall reimburse the developer for any additional costs incurred as a result of installing such oversized lines. Such reimbursements shall be paid at the time the lines are connected to the Towns system.

C. Subdividers or developers who incur the cost for extending water and/or sewer lines to new subdivisions and other new developments may be reimbursed if said extensions benefit adjoining property owners. Reimbursement will be based on a proportional share per benefiting property owner, determined by the original cost of the water and/or sewer line extension. Any reimbursement procedure will be in accordance with General Statutes 160A-216 through 160A-239. Reimbursement shall be paid by benefitting adjoining property owners to the Town of Boone, who will in turn reimburse the appropriate subdivider or developer. Reimbursement shall commence at the time a property owner requests hookup. The Town of Boone shall not incur any interest charges at the time of reimbursement.

D. All costs required to be borne by the subdivider or developer shall be paid before service is initiated by the Town.

Section 6-5. Replacement of Dilapidated Water and/or Sewer Lines.

Where it is necessary to replace dilapidated water and/or sewer lines currently maintained by the Town of Boone, those adjoining property owners benefitting from said replacement shall be assessed according to General Statutes 160A-216 through 160A-239. If the Town chooses to replace dilapidated water or sewer lines with lines larger than those previously in place, adjoining property owners shall only be assessed the cost of replacing the original sized lines. The Town of Boone will

be responsible for the difference in cost of the original lines and those larger lines installed.

Section 6-6. Extensions Outside of Town.

A. The Town has no responsibility to provide water and sewer service to property located outside the corporate limits. However, upon request by a property owner, or municipal or county government, the Town may extend its water lines and/or sewer lines and/or water and/or sewer services beyond the Town limits. As described herein, the Town may impose such conditions as it may deem appropriate on any such extension(s). Nothing in this section, however, shall create any right to, or property interest in, water and/or sewer service, and absent express written authorization and formal action by the Town Council, the Town shall not bind itself to provide such service(s).

B. Any owner of property outside the corporate limits who seeks an extension of the Town's water and/or sewer system, or seeks to connect water and/or sewer service lines to existing water and/or sewer lines, whether the existing lines are inside or outside the corporate limits, to serve property outside the corporate limits may make an application for such extension to the Town. The owner shall provide all information the Town deems necessary to determine whether the requested extension(s) is feasible and in the Town's best interest.

C. Absent express written authorization and formal action by the Town Council based upon a finding of exigent circumstances or for other reasons determined by the Town Council as in the best interest of the Town, the responsibility for and the entire cost of extending a water or sewer line from an existing line, shall be borne by the person or entity requesting the extension. In addition, the entire cost of extending lines to and within new subdivision or developments outside the Town shall be borne by the subdivider or developer, and shall be paid before the service will be initiated by the Town.

D. Without the action of the Town Council, the Town of Boone Public Utilities Department may, but is not required to, extend water and/or sewer services within the Town's Extra Territorial Jurisdiction (ETJ) when the following conditions are met:

1. The property for which service is applied, is adjacent to an existing easement for water and/or sewer lines, or such easement can be provided at no expense to the Town;

2. The property is adjacent to water and/or sewer lines, as relevant, existing on October 1, 1994.

3. A property owner wishing to connect to the Town's sewer system concurrently connects into the Town's water system if water service is available within two hundred feet of the nearest boundary of the property.

4. The property owner files a petition for voluntary annexation of the property into the

Town.

E. Except for those applications authorized by subsection D,*supra*, no extension of Town water and/or sewer services outside the Town limits is authorized, absent express written authorization and formal action by the Town Council. Any conditions required by the Town shall be stated in the ordinance authorizing the extension of water and/or sewer services.

1. Extensions outside the Town limits, but within the Town's ETJ, in addition to those authorized in subsection D, *supra*, will be granted only if the property owner files a petition for voluntary annexation of the property into the Town and complies with such other conditions as the Town Council may impose, taking into consideration the best interests of the Town. However, the Town Council may waive the requirement of a petition for annexation if:

   a. The Town needs an easement from the property owner in order to extend its water and/or sewer lines, and the owner voluntarily provides the Town with the requested easement(s); or

   b. If the property owner is not required under North Carolina General Statutes to pay ad valorem taxes.

   c. The property owner is an owner of a portion, but not an entire subdivision, does not control the persons or entities which own the remainder of the subdivision, and does not have the authority, individually, to petition for annexation of the entire subdivision.

2. Extensions outside the Town limits and the Town's ETJ may be granted subject to such conditions as the Town Council may deem appropriate and in the best interests of the Town. An applicant for such service must provide such information to the Town Council as the Council may request or may require in order to make a determination as to what conditions may be appropriate with respect to the application, and the failure of the applicant to provide such information shall be deemed a withdrawal of the application. Conditions imposed by the Town Council may include, but are not limited to, one or more of the following:

   a. Compliance by the applicant with all other relevant sections of the Town's Water and Sewer Use Ordinance;

   b. The conveyance of temporary construction and permanent maintenance easements by the applicant to the Town.

   c. The completed voluntary annexation and designation of zoning district for the property in question, for which the Town Council may authorize concurrent annexation and zoning designation procedures to be undertaken,

prior to any commitment of Town water and/or sewer service.

d. The connection of the property to both Town water and sewer services;

e. Compliance by the property owner or his or her transferees, assignees, lessees, or other persons with interests in the property in question with the provisions of the Town's Unified Development Ordinance as to any new construction or construction undertaken within the previous year, consistent with the requirements of such zoning district as the Town Council may deem appropriate;

f. The filing of a petition for annexation by the owner of the property.

3. When an extension or connection to an Affordable Rental Housing Project outside the Town limits has been authorized under this Article and other pertinent ordinances, customers thereby served shall be charged at the rate of in-town customers if all of the following are met.

a. The Project is managed by a duly created and authorized Housing Authority, as that term is defined pursuant to NC General Statute 157-3;

b. All residents of the Project qualify for and receive housing assistance under the Section 8 Program, United Stated Housing Act of 1937, as amended, or all residents of the Project qualify for and receive public housing, as that term is defined under the United States Housing Act of 1937, as amended; and

c. The Housing Authority which management the Project executes an agreement to indemnify and reimburse the Town for any undercharge due the Town as a result of the cessation of the Project's compliance with the criteria of this section, §6-6(E)(3), until sixty days after the Housing Authority has notified the Town in writing that the Project is no longer entitled to the in-town rate.

Section 6-7. Extensions Made by Other Than Town Forces.

A. All additions to the Town's water or sewer system installed by other than Town forces, whether inside or outside the Town, shall be installed in accordance with the provisions of this Ordinance as well as other Town specifications and requirements. Among other matters, such specifications shall govern the size of all lines, their location, grade, materials used, manner of installation, and provision for future extensions.

B. No construction on any addition to the Town's water or sewer system shall commence until detailed plans have been reviewed and approved by the administrator. Such plans shall include whatever information the administrator deems reasonably necessary to determine

whether the proposed extension complies with all applicable Town specifications and requirements.

C. To avoid excessive utility cuts and to protect street surfaces, the Town may require that whenever extensions of water or sewer lines are to be made to properties or within new subdivisions, laterals be extended to all properties expected to tap onto such water or sewer lines.

D. By making application for extension to the Town's water or sewer system, the person responsible for the extension agrees to indemnify and hold the Town harmless for all loss, cost, damage, liability, or expense resulting from injury to any person or property arising out of the extension of such service lines.

Section 6-8. Inspection by Town of Work Done by Others.

A. All work on the extension of water or sewer lines not performed by Town forces (whether inside or outside the Town) shall be subject to inspection by the Town. If, in the judgment of the administrator, there is a demonstrated lack of competent supervision by a contractor, the administrator may at his option:

1. Halt work until approved supervision is obtained and the work done in accordance with the Town specifications and requirements; or

2. Provide constant inspection by Town personnel at the expense of the applicant.

B. Inspection of a project by the Town does not consist of or imply supervision. The person requesting the extension is solely responsible for ensuring that the project is completed according to Town specifications (if the work is not done by Town forces) and may be required to rearrange or do over any work to bring it into conformity with such specifications and requirements.

Section 6-9. Easements Necessary for Line Extensions.

A. Within the Town, water mains shall be extended by the Town only within the rights-of-way of public streets, except that the Town may extend its lines within private streets or property when furnished with the necessary water line easement. Water lines extended outside the Town will be allowed to connect to the Town's system only if installed within right of way of a public street or within a private street or property with respect to which the Town has been granted a water line easement.

B. Sewer lines shall be installed within public street rights-of-way whenever practicable, but the Town may accept sewer lines constructed within private streets or (where the topography makes this necessary) other private property if adequate easements are provided.

C. Notwithstanding the foregoing, the Town may accept an offer of dedication lines installed within unsubdivided commercial or industrial developments if necessary easements are provided.

D. Whenever easements are required under this section, the responsibility for obtaining and furnishing the Town with such easements (including all costs associated with easement acquisition) shall lie with the person seeking the line extension.

Section 6-10. Dedication of Water and Sewer Line Extensions.

A. All water and sewer mains constructed and connected with the facilities of the Town pursuant to this article shall be conveyed to and become the property of the Town upon completion and acceptance by the Town. Connection to the system and acceptance by the Town shall constitute dedication of a water or sewer main extension by the person responsible for the extension.

B. Following dedication as provided in subsection (a), the Town shall have exclusive control of all water or sewer lines and shall be responsible for their maintenance, repair, and operation. However, the conveyer of additions to the system shall guarantee the entire project against defective material and workmanship for a period of twelve (12) months from the date of completion and acceptance of the project, including such incidental damages as may arise from such claim.

Section 6-11. Reserved.

ARTICLE VII
WATER CONSERVATION REGULATIONS

AN ORDINANCE PROVIDING FOR CONSERVATION OF WATER DURING DECLARED DROUGHT CONDITIONS OR A WATER SHORTAGE, AND FOR RESTRICTIONS ON THE USE OF WATER DURING SEVERE SHORTAGES

BE IT ORDAINED by the Boone Town Council that a water shortage shall be deemed to exist when the quantity of water flowing from the Town water system, or an expected increase in that level of water flow, will be equal to or greater than the Town's raw water supply or transmission capabilities. The water flow quantity may be the result of demand for finished water from the Town of Boone's water system customers or a serious malfunction in the water transmission system. When the water outflow pattern is expected to result in a condition whereby customers cannot be supplied with sufficient water to protect their health and safety, then the customer demand for water must be substantially curtailed.

Section 7-1. Applicability of Water Conservation Regulations.

Whenever the conditions described in Section 7.10 are met, a Water Shortage stage at the level indicated shall be declared in accordance the procedures and regulations of this Article. Recognizing that there may be situations in which those "triggers" do not fully reflect the threat to the Town's water supply, however, even if such conditions have not been strictly met, in the event it appears to the Director of Public Utilities that outflow from the Town water system may exceed its raw water supply or transmission capabilities, the Director of Public Utilities shall notify the Town Manager. The Town Manager, following consultation with the Town Council, may declare a Stage I Water Shortage requesting voluntary water conservation by customers. If voluntary conservation measures fail to adequately decrease outflow from the system, or if conditions exist that make it likely in the opinion of the Town Manager that voluntary measures will be inadequate; the Town Manager may, after consultation with the Director of Public Utilities or following consultation with the Town Council, declare a Stage II or Stage III Water Shortage. In exercising this authority, the Town Manager shall consider water shortage levels and available sources or supply, draw-patterns and availability of water from other sources. However, this Article is not intended to supersede or amend the Town's responsibilities under another interconnect agreement with another water system.

Section 7-2. Reserved.

Section 7-3. Announcement of Water Shortage.

If a Water Shortage is declared, the Director of Public Utilities shall initiate an extensive publicity campaign, using public media and other measures to the public's knowledge about an impending

or existing water shortage. All such publicity campaigns shall at a minimum inform the public of the existing or anticipated level of the shortage and the implications of a shortage, in terms of voluntary and involuntary restrictions on the use of water, and the campaign shall encourage and recommend specific conservation measures. The Director of Public Utilities shall also inform all employees of the Public Utilities Department and Town of the impending or existing shortage.

Section 7-4. Goals for Each Water Shortage.

A. The water use reduction goal for a Stage I Water Shortage is 10% average daily demand for the same calendar month each of the previous three calendar years.

B. The water use reduction goal for a Stage II Water Shortage is 25% average daily demand for the same calendar month each of the previous three calendar years.

C. The water use reduction goal for a Stage III Water Shortage is 50% average daily demand for the same calendar month each of the previous three calendar years.

Section 7-5. Specific Conservation Methods and Recommendations Applicable to All Water Shortages.

Stage I Water Shortage Restrictions

A. During Stage I Water Shortage each method shall be voluntary unless it is superceded explicitly by the mandatory provisions of Sections 7-7 or 7-9:

1. Reusing water whenever possible unless such reuse is prohibited under this code, e.g., black water or grey water;
2. Minimizing vehicle washing;
3. Limiting lawn, garden, and plant watering to the minimum necessary for such vegetation to survive;
4. Minimizing use of potable water to wash down outside areas such as sidewalks, patios, parking lots, service bays, or aprons, etc.;
5. Refraining from allowing faucets to run while shaving or rinsing dishes;
6. Limiting the use of washing machines and dishwashers, and when used, operating only fully loaded;
7. Taking showers instead of baths, and limiting showers to no more than four (4) minutes;
8. Avoiding flushing toilets with each single use;
9. Using flow restrictive and water saving devices as much as possible;
10. Limiting hours of operation of water-cooled air conditioners;
11. Taking all other measures which the customer or Director recognizes will conserve water use.

During Stage I, Stage II, and Stage III Water Shortages, the above nonexclusive conservation methods shall be encourage or required.

Section 7-6. Reserved.

Section 7-7. Stage II Water Shortage Restrictions.

A. During Stage II Water Shortage, it shall be unlawful and prohibited for any Town customer, including residential, commercial, and institutional users, or any other entity, to use or permit the use of water from the Town water system for the following purposes:

1. Watering an athletic field, golf course, park, lawn, grass, shrubbery, tree, flower, outside plant, or garden except in accordance with a schedule approved by the Director of Public Utilities, who, in the Director's sole discretion, shall ordinarily only allow such watering by hand-held hose or container or by drip irrigation system, but may prohibit such activities entirely;
2. Delaying new landscape work until the water shortage has ended; and utilize Xeri-Scaping and/or water efficient landscaping wherever landscaping work is installed. (Xeri-Scaping is the use of native plants.);
3. Filling or refilling a swimming pool or wading pool, hot tub, or spa;
4. Washing an automobile, truck, trailer, boat, airplane, or any other type of mobile equipment or motor vehicle unless a permitted water reclamation or reuse system is used;
5. Washing down an outside area including but not limited to a street, driveway, service station apron, parking lot, office building, exterior of existing or newly-constructed home or other building, sidewalk, or patio, except pursuant to specific authorization by the Town of Boone;
6. Using water from a public or private fire hydrant for any purpose other than fire suppression, testing, maintaining water quality, or similar public emergency;
7. Operating or inducing water into any ornamental fountain, pool, or pond or other structure making similar use of water;
8. Serving drinking water in a restaurant, cafeteria, or other food establishment, except upon request;
9. Operating a water-cooled air conditioner or other equipment that does not recycle cooling water, except when the user has a diagnosed and legitimate health need for the equipment;
10. Using in commercial eating establishments, utensils and plates that must be washed if disposable or biodegradable utensils and plates can be effectively used;
11. Using water for any unnecessary purpose after being warned by the Director or designee to discontinue such use; and
12. Wasting water intentionally.

B. During a Stage II Water Shortage:

1. All commercial and institutional customers are encourage to undergo a water audit by the Director or his designee, and following such audit, come into full compliance with the audit recommendations.
2. Total water consumption may be limited and a surcharge imposed upon water system customers by specific action of the Town Council.

Section 7-8. Reserved.

Section 7-9. Stage III Water Shortage Restrictions and Measures.

A. During a Stage III Water Shortage, medical facilities shall be the highest priority for available water. To protect the water supply for that and other essential purposes, it shall be unlawful and prohibited for any Town customer, including residential, commercial, and institutional users, or any other entity, to use or permit the use of water from the Town water system for the following purposes:

1. Using water in a way prohibited by Section 7-7, *supra*, unless superseded by this section;

2. Using water for any outdoor use other than in an emergency, or

3. Using in commercial eating establishments utensils and plates that must be washed.

B. During a Stage III Water Shortage:

1. All commercial and industrial customers must fully cooperate with a water audit requested and scheduled by the Director or his designee. Following such audit, or if the customer has been previously audited, the customer must come into full compliance with the audit recommendations within ten days of the declaration of the water shortage or the audit, whichever is later, unless due to the cost of full compliance the Director, in writing, extends the time for full compliance to another date certain.

2. Total water consumption may be limited and a surcharge imposed upon water system customers by specific action of the Town Council.

Section 7-10. River Operating Conditions.

Stage	River Operating Conditions
1	Water Level reading of >8.0 but <7.85 at Intake in South-fork and/or, Discharge at USGS Gage 03161000 is <300cfs for >14 days and/or, >80% of Production Capacity for 3 consecutive days or, at any time as recommended by Public Utilities staff
2	Water Level reading of <7.85 but >7.6 at Intake in South-fork and/or, Discharge at USGS Gage 03161000 is <150cfs for >10 days and/or, >90% of Production Capacity for 3 consecutive days at any time as recommended by Public Utilities staff
3	Water Level reading of <7.6 at Intake in South-fork or, Discharge at USGS Gage 03161000 is <50cfs or, 100% of Production Capacity on any day or, at any time as recommended by Public Utilities staff

Section 7-11. Penalties.

A. The Director or the Director's designee may impose the following civil penalties for violation of the mandatory provisions of Section 7-7 of this Article (Stage II):

1. First Offense — Warning;
2. Second Offense — $100.00;
3. Third Offense — $250.00;
4. Fourth and Each Subsequent Offense — $500.00.

B. The Director or the Director's designee may impose the following civic penalties for violation of the mandatory provisions of Section 7-9 of this Article (Stage III):

1. First Offense — $200.00;
2. Second Offense — $500.00;
3. Third Offense and Each Subsequent Offense — $1,000.00.
4. In addition to these civil penalties, violation of a prohibition or requirement of a Stage III Water Shortage shall be a misdemeanor, pursuant to N.C. Gen. Stat. § 14-4, punishable by a fine equal to the stated civil penalty up to a maximum of $500.00, and imprisonment for each offense of up to thirty (30) days.

C. When a civil penalty has been imposed pursuant to this section, it must be paid within ten days following receipt of notification of the imposition of the penalty. Receipt is presumed three days after mailing by regular, first class mail. Thereafter, the penalty is automatically doubled and shall be added to the customer's monthly water bill.

D. In addition to the aforesaid civil and criminal penalties, the Town may disconnect a customer from the Town's water supply after two or more violations of Section 7-7 or 7-9 during any

thirty-six month period or the duration of a water shortage declaration, whichever is longer. Should service be disconnected pursuant to this Article, a one hundred ($100.00) dollar reconnect fee shall be imposed before service is restored. If three or more violations of Section 7-7 or 7-9 occur during any thirty-six month period or the duration of the water shortage declaration, whichever is longer, the Town may also, pursuant to the discretion of the Director, remove the customer's water meter, and in that event, all previously unpaid fees and deposits shall be forfeited. Reconnection thereafter shall only be made with the approval of the Town Manager. Before service is restored after the removal of the customer's water meter, in addition to the one hundred ($100.00) dollar reconnect fee, the customer shall also be required to pay new tap fees and availability fees, and a deposit equal to twice the usual service deposit.

Section 7-12. Appeals.

A. A customer whose service is disconnected or who receives a notice of termination shall have the right to appeal as set forth in Article III, Section 3-10, of the Town of Boone Water and Sewer Use Ordinance. In the event of a timely appeal, the termination order will be suspended until an appeal decision has been issued.

B. Customers do not have the right to an Article III, Section 3-10 appeal of a citation, civil penalty, or fee imposed by this section. When a customer contends that a citation or civil penalty, or fee was issued or imposed in error, the customer may dispute the violation which gave rise to the citation, civil penalty, or fee by submitting to the Director information which shows that the customer did not violate the pertinent section of this Article. If the citation, civil penalty, or fee is thereafter determined by the Director to have been issued in error, the Director shall take appropriate action to recall it.

Section 7-13. Lifting of Restrictions Imposed During a Water Shortage.

A declared Water Shortage Stage ends only when the Town Manager, after consultation with the Town Council and upon recommendation of the Director of Public Utilities, deems that the conditions which caused the shortage have abated. The termination of a Water Shortage declaration shall be promptly and extensively publicized.

ARTICLE VIII
PRETREATMENT STANDARDS

Section 8-1. Illegal Discharges.

No person(s) shall discharge or cause to be discharged any stormwater, groundwater, roof runoff, subsurface drainage or cooling water to any public sanitary sewer without specific written approval from the Superintendent.

Section 8-2. Unpolluted Drainage.

All unpolluted drainage, such as storm water, shall be discharged to storm sewers or to a natural outlet. Industrial cooling waters, process waters and approved harvested rainwater shall be discharged into the public sanitary sewer system.

Section 8-3. General Provisions.

A. Purpose and Policy.

This section of the Town of Boone Water and Sewer Use Ordinance sets forth uniform requirements for direct and indirect contributors into the wastewater collection and treatment system for the Town of Boone, hereafter referred to as the Town, and enables the Town to comply with all applicable State and Federal laws, including the Clean Water Act (33 United States Code 1251 *et seq.*) and the General Pretreatment Regulations (40 CFR, Part 403). The objectives of this Section are:

1. To prevent the introduction of pollutants into the municipality wastewater system which will interfere with the operation of the system or contaminate the resulting sludge;

2. To prevent the introduction of pollutants into the municipal wastewater system which will pass through the system, inadequately treated, into receiving water or the atmosphere or otherwise be incompatible with the system;

3. To promote reuse and recycling of industrial wastewater and sludges from the municipal system;

4. To provide for equitable distribution of the cost of the municipal wastewater system;

5. To protect both municipal personnel who may be affected by sewage, sludge, and effluent in the course of their employment, as well as protecting the general public; and

6. To ensure that the municipality complies with the NPDES for Nondischarge Permit conditions, sludge use and disposal requirements and any other Federal and State laws to which the municipal wastewater system is subject. This Article provides for the regulation of direct and indirect contributors to the municipal wastewater system, through the issuance of permits to certain non-domestic users and through enforcement of general requirements for the other users, authorizes monitoring and enforcement activities, requires user reporting and provides for the setting of fees for the equitable distribution of costs resulting from the program established herein.This Article shall apply to all users of the municipal wastewater system.

   Except as otherwise provided herein, the POTW Director shall administer, implement and enforce the provisions of this article. Any powers granted to or imposed upon the POTW Director may be delegated by the POTW Director to other Town personnel. By discharging wastewater into the municipal wastewater system, industrial users located outside the Town limits agree to comply with the terms and conditions established in this Ordinance, as well as any permits, enforced actions, or orders issued hereunder.

B. Definitions and Abbreviations.

Unless the context specifically indicates otherwise, the following terms and phrases, as used in this Article, shall have the meanings hereinafter designated:

1. **Act or "the Act"**: The Federal Water Pollution Control Act, also known as the Clean Water Act, as amended, 33 U.S.S. 1251, *et. seq.*

2. **Approval Authority**: The Director of the Division of Environmental Management of the North Carolina Department of Natural Resources and Community Development.

3. **Authorized Representative of an Industrial User**: An authorized representative of an Industrial User may be:
   a. A principal executive officer of at least the level of vice-president, if the Industrial User is a corporation;

   b. A general partner or proprietor if the Industrial User is a partnership or proprietorship, respectively;

   c. A duly authorized representative of the individual designated above if such representative is responsible for the overall operation of the facilities from which the indirect discharge originates.

4. **Authorized Representative of an Industrial User**:

a. If the industrial user is a corporation, authorized representative shall mean (A) the president, secretary, or a vice-president of the corporation in charge of a principle business function, or any other person who performs similar policy or decision making functions for the corporation, or (B) the manager of one or more manufacturing, production, or operating facilities employing more than two hundred fifty (250) persons or having gross annual sales or expenditures exceeding twenty-five (25) million dollars (in second-quarter 1980 dollars), if authority to sign documents has been assigned or delegated to the manager in accordance with corporate procedures.

b. If the industrial user is a partnership or sole proprietorship, an authorized representative shall mean a general partner or the proprietor, respectively.

c. If the industrial user is a Federal, State, or local government facility, an authorized representative shall mean a director or highest official appointed or designated to oversee the operation and performance of the activities of the government facility, or their designee.

d. The individuals described in paragraphs i-iii above may designate another authorized representative if the authorization is in writing, the authorization specifies the individual or position responsible for the overall operation of the facility from which the discharge originates or having overall responsibility for environmental matters for the company, and the written authorization is submitted to the city.

5. **Biochemical Oxygen Demand (BOD)**: The quantity of oxygen utilized in the biochemical oxidation of organic matter under standard laboratory procedures for five (5) days at 20 centigrade, usually expressed as a concentration (mg/l).

6. **Building Sewer**: A sewer conveying wastewater from the premises of a User to the POTW.

7. **Bypass**: The intentional diversion of wastestreams from any portion of a user's treatment facility.

8. **Categorical Standards**: National Categorical Pretreatment Standards or Pretreatment Standard.

9. **Environmental Protection Agency (EPA)** : The U.S. Environmental Protection Agency, or where appropriate the term may also be used as a designation for the Administrator or other duly authorized official of said agency.

10. **Grab Sample**: A sample which is taken from a waste stream on a one-time basis with no regard to the flow in the waste stream and over a period of time not to

exceed 15 minutes .

11. **Holding Tank Waste**: Any waste from holding tanks, including but not limited to such holding tanks as vessels, chemical toilets, campers, trailers, septic tanks and vacuum-pump trucks.

12. **Indirect Discharge or Discharge**: The discharge or the introduction from any nondomestic source regulated under section 307(b), (c), or (d) of the Act, (33 U.S.C. 1317), into the POTW (including holding tank waste discharged into the system).

13. **Industrial User or User**: A source of Indirect Discharge which does not constitute a discharge of pollutants under regulations issued pursuant to Section 402 of the Act (33 U.S.C. 1342).

14. **Interference**: The inhibition, or disruption of the POTW treatment processes or operations which contributes to a violation of any requirement of the POTW's NPDES Permit. The term includes prevention of sewage sludge use or disposal by the POTW in accordance with section 405 of the Act (33 U.S.C. 1345) or any criteria, guidelines, or regulations developed pursuant to the Solid Waste Disposal Act (SWDA)(42 U.S.C. 6901, *et seq.*), the Clean Air Act, the Toxic Substances Control Act, or more stringent state criteria (including those contained in any State sludge management plan prepared pursuant to Title IV of the SWDA) applicable to the method of disposal or use employed by the POTW.

15. **Medical Waste**: Isolation wastes, infectious agents, human blood and blood products, pathological wastes, sharps, body parts, contaminated bedding, surgical wastes, potentially contaminated laboratory wastes, and dialysis wastes.

16. **National Categorical Pretreatment Standard or Categorical Standard**: Any regulation containing pollutant discharge limits promulgated by EPA in accordance with Sections 307(b) and (c) of the Act (33 U.S.C. 1347) which applies to a specific category of Industrial Users.

17. **National Pollution Discharge Elimination System (NPEDS) Permit**: A permit issued pursuant to Section 402 of the Act (33 U.S.C. 1342) or pursuant to G.S. 143-215.1 by the State under delegation from EPA.

18. **National Prohibitive Discharge Standard or Prohibitive Discharge Standard**: Absolute prohibitions against the discharge of certain substances; these prohibitions appear in section (8-4) of this article and are developed under the authority of 307(b) of the Act and 40 CFR, Section 403.5.

19. **New Source**:

a. Any building, structure, facility, or installation from which there may be discharge, the construction of which commenced after the publication of a proposed Categorical Pretreatment Standards under Section 307(c) of the Act which will be applicable to such source if such standards are thereafter promulgated in accordance with section 307(c), provided that:

1. the building, structure, facility, or installation is constructed at a site at which no other source is located;

2. the building, structure, facility, or installation totally replaces the process or production equipment that causes the discharge of pollutants at an existing source; or

3. the production or wastewater generating processes of the building, structure, facility, or installation are substantially independent of an existing source at the same site. In determining whether these are substantially intentioned, factors such as the extent to which the new facility is integrated with the existing plant, and the extent to which the new facility is engaged in the same general type if activity as the existing source, should be considered.

b. Construction on a site at which an existing source is located results in a modification rather than a new source of the construction does not create a new building, structure, facility, or installation meeting the criteria of section (a2) or (a3) above but otherwise alters, replaces, or adds to existing process or production equipment.

c. For purposes of this definition, construction of a new source has commenced if the owner or operator has:

1. begun, or caused to begin as part of a continuous on-site construction program:

a. Any placement, assembly, or installation of facilities or equipment; or

b. Significant site preparation work including clearing, excavation, or removal of existing buildings, structures or facilities which is necessary for the placement, assembly, or installation of new source facilities or equipment; or

2. Entered into a binding contractual obligation for the purchase of facilities or equipment which are intended to be used in its operation within a reasonable time. Options to purchase or contracts which can

be terminated or modified without substantial loss, and contracts for feasibility, engineering, and design studies do not constitute a contractual obligation under this definition.

20. **Non-discharge Permit**: A disposal system issued by the State pursuant to NCGS 143-215.1.

21. **Noncontact Cooling Water** : Water used for cooling which does not come into direct contact with any raw material, intermediate product, waste product, or finished product.

22. **Pass Through**: A discharge which exits the POTW into waters of the State in quantities or concentrations which, alone or with discharges from other sources, causes a violation, including an increase in the magnitude or duration of a violation, of the POTWs NPDES or Non-discharge Permit, or a downstream water quality standard.

23. **Person**: Any individual, partnership, co-partnership, firm, company, corporation, association, joint stock company, trust, estate, governmental entity or any other legal entity, or their legal representatives, agents or assigns. This definition includes all Federal, State, and local government entities. The masculine gender shall include the feminine, the singular shall include the plural where indicated by the context.

24. **pH**: The logarithm (base 10) of the reciprocal of the concentration of hydrogen ions expressed in grams per liter of solution.

25. **Pollutant**: Any dredged spoil, solid waste, incinerator residue, sewage, garbage, sewage sludge, munitions, medical wastes, chemical wastes, biological materials, radioactive materials, heat, wrecked or discharged equipment, rock, sand, cellar dirt and industrial, municipal and agricultural waste and certain characteristics of wastewater (e.g., pH, temperature, TSS, turbidity, color, BOD, COD, toxicity, or odor) discharged into water.

26. **Pollution**: The man-made or man-induced alteration of the chemical, physical, physiological and radiological integrity of water.

27. **POTW Director**: The Town of Boone Director of Public Utilities.

28. **POTW Treatment Plant**: That portion of the POTW designed to provide treatment to wastewater.

29. **Pretreatment or Treatment**: The reduction of the amount of pollutants, the elimination of pollutants, or the alteration of the nature of pollutant properties in wastewater prior to or in lieu of discharging or otherwise introducing such pollutants

into a POTW. The reduction or alteration can be obtained by physical, chemical or biological processes, or process changes or other means, except by diluting the concentration of the pollutants unless allowed by an applicable pretreatment standard .

30. **Pretreatment Program**: The program for the control of pollutants introduced into the POTW from non-domestic sources which was developed by the Town of Boone in compliance with 40 CFR 403.8 and approved by the Approval Authority in accordance with 40 CFR 403.11 .

31. **Pretreatment Requirements**: Any substantive or procedural requirement related to pretreatment, other than a pretreatment standard.

32. **Pretreatment Standards**: Prohibited discharge standards, categorical standards, and local limits.

33. **Public Owned Treatment Works (POTW) or Municipal Wastewater System**: A treatment works as defined by Section 212 of the Act (33 U.S.C. 1292) which is owned in this instance by the Town of Boone. This definition includes any devices or systems used in the collection, storage, treatment, recycling, and reclamation of municipal sewage or industrial wastes of a liquid nature. It also includes sewers, pipes, and other conveyances only if they convey wastewater to the POTW treatment plant. For the purposes of this ordinance, POTW shall also include any sewers that convey wastewaters to the POTW from persons outside the Town of Boone who are, by contract or agreement with the Town of Boone, or in any other way, users of the Town's POTW.

34. **Severe Property Damage**: Substantial physical damage to property, damage to the users treatment facilities which causes them to become inoperable, or substantial and permanent loss of natural resources which can reasonably be expected to occur in the absence of a bypass. Severe property damage does not mean economic loss caused by delays in production.

35. **Shall is mandatory; May is permissive.**

36. **Significant Industrial User**: Any Industrial User of the wastewater disposal system who (a) has a process wastewater flow of 25,000 gallons or more per average work day, or (b) contributes more than 5% of any design or treatment capacity of the wastewater treatment plant receiving the discharge, or (c) is required to meet a National Categorical Pretreatment Standard, or (d) is found by the Town of Boone, the Division of Environmental Management or the U.S. Environmental Protection Agency (EPA) to have significant impact, either singly or in combination with other contributing industries, on the wastewater treatment system, the quality of sludge, the systems effluent quality, or air emissions generated by the system.

37. **Significant Noncompliance or Reportable Noncompliance**: A status of noncompliance defined as follows:

a. Violations of wastewater discharge limits.

1. Chronic Violations: Sixty-six percent or more of the measurements exceed (by any magnitude) the same daily maximum limit or the same average limit in a six-month period.

2. Technical Review Criteria (TRC) violations: Thirty-three percent or more of the measurements are more than the TRC times the limit (maximum or average) in a six-month period. There are two groups of TRCs - For conventional pollutants BOD, TSS, fats, oil and grease TRC = 1.4 For all other pollutants TRC = 1.2

3. Any other violations of an effluent limit (average or daily maximum) that the control authority believes has caused, alone or in combination with other discharges, interference or pall-through; or endangers the health of the sewage treatment plant personnel or the public.

4. Any discharge of a pollutant that has caused imminent endangerment to human health/welfare or to the environment and has resulted in the POTW's exercise of its emergency authority to halt or prevent such a discharge.

b. Violations of compliance schedule milestones, contained in a pretreatment permit or enforcement order, for starting construction, completing construction, and attaining final compliance by 90 days or more after the schedule date.

c. Failure to provide reports for compliance schedule, self-monitoring data, baseline monitoring reports, 90-day compliance reports, and periodic compliance reports within 30 days from the due date.

d. Failure to accurately report noncompliance.

e. Any other violation or group of violations that the control authority considers to be significant.

38. **Slug Load**: Any discharge at a flow rate or concentration which could cause a violation of the prohibited discharge standards in Section 8-4(A) of this Ordinance.

39. **Standard Industrial Classification (SIC)** A classification pursuant to the Standard Industrial Classification Manual issued by the Executive Office of the President, Office of Management and Budget, 1972.

40. **Storm Water** : Any flow occurring during or following any form of natural precipitation and resulting therefrom.

41. **Superintendent**: The person designated by the Town of Boone to supervise the operation of the publicly owned treatment works and who is charged with certain duties and responsibilities by this article, or his duly authorized representative.

42. **Suspended Solids**: The total suspended matter that floats on the surface of, or is suspended in, water, wastewater or other liquids, and which is removable by laboratory filtering.

43. **Upset**: An exceptional incident in which there is unintentional and temporary noncompliance with categorical pretreatment standards because of factors beyond the reasonable control of the user. An upset does not include noncompliance to the extent caused by operational error, improperly designed treatment facilities, inadequate treatment facilities lack of preventive maintenance, or careless or improper operation.

44. **Wastewater**: The liquid and water-carried industrial or domestic wastes from dwellings, commercial building, industrial facilities, and institutions, together or separate, whether treated or untreated, which are contributed into or permitted to enter the POTW.

45. **Wastewater Contribution Permit**: As set forth in Section 8-15 of this ordinance.

46. **Waters of the State**: All streams, lakes, ponds, marshes, watercourses, waterways, wells, springs, reservoirs, aquifers, irrigation systems, drainage systems and all other bodies or accumulations of water, surface or underground,natural or artificial, public or private, which are contained within, flow through, or border upon the State or any portion thereof.

47. The following abbreviations when used in this ordinance, shall have the designated meanings:

    a. BOD - Biochemical Oxygen Demand
    b. CFR - Code of Federal Regulations
    c. COD - Chemical Oxygen Demand
    d. EPA - Environmental Protection Agency
    e. l - Liter
    f. mg - Milligrams
    g. mg/l - Milligrams per liter
    h. NPDES - National Pollutant Discharge Elimination System
    i. POTW - Publicly Owned Treatment Works
    j. SIC - Standard Industrial Classification

k. SWDA - Solid Waste Disposal Act
l. USC - United States Code
m. TSS - Total Suspended Solids
n. TKN - Total Kjeldahl Nitrogen
o. gpd - Gallons Per Day
p. NCGS - North Carolina General Statutes
q. O & M - Operation and Maintenance
r. RCRA - Resources Conservation and Recovery Act

This ordinance is gender neutral and the masculine gender shall include the feminine and vice-versa. The use of the singular shall be construed to include the plural and the plural shall include the singular as indicated by the context of its use.

Section 8-4. General Sewer Use Requirements.

A. Prohibited Discharge Standards.

1. General Prohibitions: No User shall contribute or cause to be contributed into the POTW, directly or indirectly, any pollutant or wastewater which causes interference or pass through. These general prohibitions apply to all Users of a POTW whether or not the User is a Significant Industrial User or subject to any National, State or local Pretreatment Standards or Requirements.

2. Specific Prohibitions: No user shall contribute or cause to be contributed into the POTW the following pollutants, substances, or wastewater:

a. Pollutants which create a fire or explosive hazard in the POTW, including, but not limited to, wastestreams with a closed cup flashpoint of less than 140 degrees F(60 C) using the test methods specified in 40 CFR 261.21. Prohibited materials include, but are not limited to, gasoline, kerosene, naphtha, benzene, toluene, xylene, ethers, alcohols, ketones, aldehydes, peroxides, chlorates, perchlorates, bromates, carbides, hydrides and sulfides and any other substances which the Town, the State or EPA has notified the User is a fire hazard or a hazard to the system.

b. Solid or viscous substances which may cause obstruction to the flow in the POTW or other interference with the operation of the wastewater treatment facilities such as, but not limited to: grease, garbage with particles greater than one-half inch (1/2") in any dimension, animal guts or tissues, paunch manure, bones, hair, hides or fleshings, entrails, whole blood, feathers, ashes, cinders, sand, spent lime, stone or marble dust, metal, glass, straw, shavings, grass clippings, rags, spent grains, spent hops, waste paper, wood, plastics, gas, tar, asphalt residues, residues from refining, or processing of fuel,

lubricating oil, mud, glass grinding or polishing wastes.

c. Any wastewater having a pH less than 5.0, unless the POTW is specifically designed to accommodate such wastewater, or wastewater having any other corrosive property capable of causing damage to the POTW or equipment.

d. Any wastewater containing toxic pollutants in sufficient quantity, either singly or by interaction with other pollutants, to injure or interfere with any wastewater treatment process, constitute a hazard to humans or animals, create a toxic effect in the receiving waters of the POTW, or to exceed the limitation set forth in a Categorical Pretreatment Standard. A toxic pollutant shall include but not be limited to any pollutant identified pursuant to Section 307(a) of the Act.

e. Any noxious or malodorous liquids, gases or solids which either singly or by interaction with other wastes are sufficient to create a public nuisance or hazard to life or are sufficient to prevent entry into the sewers for maintenance and repair.

f. Any substance which may cause the POTWs effluent or any other product of the POTW such as residues, sludges or scums to be unsuitable for reclamation and reuse or to interfere with the reclamation process. In a case, shall a substance discharged to the POTW cause the POTW to be in noncompliance with sludge use or disposal criteria, guidelines or regulations developed under Section 405 of the Act; any criteria, guidelines or regulations affecting sludge use or disposal developed pursuant to the Solid Waste Disposal Act, the Clean Air Act, the Toxic Substances Control Act, or State criteria applicable to the sludge management method being used.

g. Any substance which will cause the POTW to violate its NPDES and/or State Disposal System Permit or the receiving water quality standards.

h. Any wastewater with objectionable color not removed in the treatment process, including but not limited to, dye wastes and vegetable tanning solutions, which consequently imparts sufficient color to the treatment plant's effluent to render the waters injurious to public health, secondary recreation, to aquatic life and wildlife, to adversely affect the palatability of fish, aesthetic quality, or impair the receiving waters for any designated uses.

i. Any wastewater having a temperature which will inhibit biological activity in the POTW treatment plant resulting in Interference, but in no case wastewater with a temperature at the introduction into the POTW which exceeds 40oC (104oF) unless the POTW treatment plant is designed to

accommodate such temperature.

j. Any pollutants, including oxygen demanding pollutants (BOD, etc) released at a flow rate and/or pollutant concentration which a user knows or has reason to know will cause Interference to the POTW. In no case shall a slug load have a flow rate or contain concentration or quantities of pollutants that exceed for any time period longer than fifteen (15) minutes more than five (5) times the average twenty-four (24) hours concentration, quantities or flow during normal operation.

k. Any wastewater containing any radioactive wastes or isotopes of such half-life or concentration as may exceed limits established by the Superintendent in compliance with applicable State or Federal regulations.

l. Any garbage that has not been properly shredded. Garbage grinders may be connected to sanitary sewers from homes, hotels, institutions, restaurants, hospitals, catering establishments, or similar places where garbage originates from the preparation of food in kitchens for the purpose of consumption on the premises or when served by caterers.

m. Any wastewater which causes a hazard to human life or creates a public nuisance.

n. Any fats or greases, including but not limited to petroleum oil, nonbiodegradable cutting oil, or products of mineral oil origin, in amounts that will cause interference or pass through.

o. Any pollutants which result in the presence of toxic gases, vapors or fumes within the system in a quantity that may cause worker health and safety problems.

p. Any trucked or hauled pollutants, except at the discharge points designated by the POTW Director.

q. Storm water, surface water, ground water, artisan well water, roof runoff, subsurface drainage, swimming pool drainage, condensate deionized water, cooling water and unpolluted industrial wastewater, unless specifically authorized by the POTW Director.

r. Fats, oils, or grease of animal or vegetable origin in concentrations greater than fifty (50) mg/l.

s. Any sludges, screenings or other residues from the pretreatment of industrial wastes.

t. Any medical wastes, except as specifically authorized by the POTW Director in a wastewater discharge permit.

q. Any material containing ammonia, ammonia salts, or other cleaning agents which will produce metallic complexes that interfere with the municipal wastewater system.

r. Any material that would be identified as hazardous waste according to 40 CFR part 261 if not disposed of in a sewer except as may be specifically authorized by the POTW Director.

s. Any wastewater causing the treatment plant effluent to violate State Water Quality Standards for toxic substances as described in 15A NCAC 2B .0020.

t. Recognizable portions of the human or animal anatomy.

u. Any wastes containing detergents, surface active agents, or other substances which may cause excessive foaming in the municipal wastewater system.

v. At no time, shall two successive readings on an explosion hazard meter, at the point of discharge into the system (or at any point in the system) be more than five percent (5%) nor any single reading over ten percent (10%) of the Lower Explosive Limit (LEL) of the meter.

3. Pollutants, substances, wastewater, or other wastes prohibited in this section shall not be processed or stored in such a manner that they could be discharged to the municipal wastewater system. All floor drains located in process or material storage areas must discharge to the industrial users pretreatment facility before connecting with the system.

4. When the Superintendent determines that a User(s) is contributing to the POTW, any of the above enumerated substances in such amounts which may cause or contribute to Interference of POTW operation, the Superintendent shall:

a. advise the User(s) of the potential impact of the contribution on the POTW; and

b. develop effluent limitation(s) for such User(s) to protect the POTW from Interference.

5. National Categorical Pretreatment Standards.

Users subject to categorical pretreatment standards are required to comply with

applicable standards as set out in 40 CFR Chapter 1, Subchapter N, Parts 405-471 and incorporated herein.

a. Where a categorical pretreatment standard is expressed only in terms of either the mass or the concentration of a pollutant in wastewater, the POTW Director may impose equivalent concentration or mass limits in accordance with 40 CFR 403.6(c).

b. When wastewater subject to a categorical pretreatment standard is mixed with wastewater not regulated by the same standard, the POTW Director shall impose an alternate limit using the combined wastestream formula in 40 CFR 403.6(e).

c. A user may obtain a variance from a categorical pretreatment standard of the user can prove, pursuant to the procedural and substantive provisions in 40 CFR 403.13, that factors relating to its discharge are fundamentally different from the factors considered by EPA when developing the categorical pretreatment standard.

d. A user may obtain a net gross adjustment to a categorical standard in accordance with 40 CFR 403.15.

Section 8-5. Local Limits.

Unless authorized by a permit issued under Section 8-15 of this Ordinance, no person shall discharge wastewater containing pollutants at levels which exceed the levels associated with domestic sewage. For the following parameters exceeding domestic sewage levels shall mean in excess of:

BOD	250 mg/l
TSS	250 mg/l
TKN	0.003 mg/l
arsenic	0.003 mg/l
cadmium	0.061 mg/l
copper	0.041 mg/l
cyanide	0.049 mg/l
lead	0.0003 mg/l
mercury	0.020 mg/l
nickel	0.005 mg/l
silver	0.05 mg/l
total chromium	0.175 mg/l
zinc	

Domestic sewage levels for pollutants not listed above shall be determined by the Superintendent and shall be based on either actually measured local domestic sewage levels or literature values.

Industrial User-specific local limits for appropriate pollutants of concern shall be included in wastewater permits and are considered pretreatment standards.

Section 8-6. State Requirements.

State requirements and limitations on discharges shall apply in any case where they are more stringent than Federal requirements and limitations or those in this Ordinance.

Section 8-7. Right of Revision.

The Town of Boone reserves the right to establish limitations and requirements which are more stringent than those required by either State or Federal regulation.

Section 8-8. Dilution.

No user shall ever increase the use of process water or, in any way, attempt to dilute a discharge as a partial or complete substitute for adequate treatment to achieve compliance with the limitations contained in the National Categorical Pretreatment Standards, or in any other pollutant specific limitation developed by the Town of Boone or State.

Section 8-9. Pretreatment of Wastewater.

A. Pretreatment Facilities.

Users shall provide wastewater treatment as necessary to comply with this ordinance and wastewater permits issued under section 8-15(B) of this ordinance and shall achieve compliance with all National categorical pretreatment standards, local limits, and the prohibitions set out in section 8-4(A) of this ordinance within the time limitations as specified by EPA, the State, or the POTW Director, whichever is more stringent. Any facilities necessary for compliance shall be provided, operated, and maintained at the user's expense. Detailed plans showing the pretreatment facilities and operating procedures shall be approved by the POTW Director before construction of the facility. The review of such plans and operating procedures shall in no way relieve the user from the responsibility of modifying the facility as necessary to produce an effluent acceptable to the Town under the provisions of this ordinance. Any subsequent changes in the pretreatment facilities or method by the POTW Director prior to the user's initiation of the changes.

B. Additional Pretreatment Measures.

1. Whenever deemed necessary, the POTW Director may require users to restrict their discharge during peak flow periods, designate that certain wastewater be discharged only into specific sewers, relocate and/or consolidate points of discharge, separate sewage wastestreams from industrial wastestreams, and such other conditions as may be necessary to protect the POTW and determine the user's compliance with the

requirements of this ordinance.

2. The POTW Director may require any person discharging into the POTW to install and maintain, on their property and at their expense, a suitable storage and flow-control facility to ensure equalization of flow. A wastewater discharge permit may be issued solely for flow equalization.

3. Grease, oil, and sand interceptors shall be provided when, in the opinion of the POTW Director, they are necessary for the proper handling of wastewater containing excessive amounts of grease and oil, or sand; except that such interceptors shall not be required for residential users. All interception units shall be of type and capacity approved by the POTW Director and shall be so located to be easily accessible for cleaning and inspection. Such interceptors shall be inspected, cleaned, and repaired regularly, as needed, by the user at their expense.

4. Users with the potential to discharge flammable substances may be required to install and maintain an approved combustible gas detection meter.

Section 8-10. Accidental Discharge/Slug Control Plans.

At least once every two (2) years, the POTW Director shall evaluate whether each significant industrial user needs an accidental discharge/slug control plan. The POTW Director may require any user to develop, submit for approval, and implement such a plan. Alternatively, the POTW Director may develop such a plan for any user. An accidental discharge/slug control plan shall address, at a minimum, the following:

A. Description of discharge practices, including nonroutine batch discharges;

B. Description of stored chemicals;

C. Procedures for immediately notifying the POTW Director of any accidental or slug discharge, as required by section 8-15 of this ordinance; and

D. Procedures to prevent adverse impact from any accidental or slug discharge. Such procedures include, but are not limited to, inspection and maintenance of storage areas, handling and transfer of materials, loading and unloading operations, control of plant site runoff, worker training, building of containment structures or equipment, measures for containing toxic organic pollutants, including solvents, and/or measures and equipment for emergency response.

Section 8-11. Hauled Wastewater.

A. Septic tank waste may be introduced into the POTW only at locations designated by the

POTW Director, and at such times as are established by the POTW Director. Such waste shall not violate section 8-4 of this ordinance or any other requirements established by the Town. The POTW Director may require septic tank waste haulers to obtain wastewater discharger permits.

B. The POTW Director shall require haulers of industrial waste to obtain wastewater discharger permits. The POTW Director may require generators of hauled industrial waste to obtain wastewater discharge permits. The POTW Director also may prohibit the disposal of hauled industrial waste. The discharge of hauled industrial waste is subject to all other requirements of this ordinance.

C. Industrial waste haulers may discharge loads only at locations designated by the POTW Director. No load may be discharged without prior consent of the POTW Director. The POTW Director may collect samples of each hauled load to ensure compliance with applicable standards. The POTW Director may require the industrial waste hauler to provide a waste analysis of any load prior to discharge.

D. Industrial waste haulers must provide a waste-tracking form for every load. This form shall include, at a minimum, the name and address of the industrial waste hauler, permit number, truck identification, names and addresses of sources of waste, and volume and characteristics of waste. The form shall identify the type of industry, known or suspected waste constituents, and whether any wastes are RCRA hazardous wastes.

Section 8-12. Unauthorized Quantities.

The admission into the public sewers of any water or wastes and having an average daily flow greater than five (5) percent of the average daily wastewater flow of the Town, having

A. A five-day Biochemical Oxygen Demand greater than 250 parts per million by weight and/or;

B. A Chemical Oxygen Demand greater than 1000 parts per million by weight and/or;

C. Containing more than 250 parts per million by weight of suspended solids, and/or;

D. Containing any quantity of the substances having the characteristics described in this Article shall be subject to the review and approval of the POTW Director. When necessary the POTW Director may:

1. Reject the wastes if the waste prevents attainment of effluent limitations of substantially increases operation and maintenance and/or;

2. Require pretreatment to the levels specified in this Ordinance as acceptable for discharge to the public sewers and/or;

3. Require control over the quantities and rates of discharge to the levels specified in this Ordinance and/or;

4. Require payment to cover the added cost of handling and treating the wastes not covered by existing taxes, fees or sewer charges. If the POTW Director permits or requires the pretreatment of waste flow, the design and installation of the plants and equipment shall be subject to the review and approval in writing of the POTW Director and subject to the requirements of all applicable codes, ordinances and laws.

Section 8-13. Grease, Oil and Sand Trap Conditions.

Grease, oil and sand interceptor sewers shall be provided when, in the opinion of the POTW Director, they are necessary for the proper handling of liquid wastes containing floatable oil in excessive amounts, or any flammable wastes, sand or other harmful ingredients; except that such interceptors shall not be required for private living quarters or dwelling units. All intercepts shall be of a type and capacity approved by the POTW Director and shall be located as to be readily and easily accessible for cleaning and inspection. Where installed, all grease, oil and sand interceptors shall be maintained by the User at his expense in continuously efficient operation at all times. In the maintaining of these interceptors, the User(s) shall be responsible for the proper removal and disposal by appropriate means of the captured material and shall maintain records of the dates and means of disposal which are subject to review by the POTW Director. Any removal and hauling of the collected materials not performed by Users personnel must be performed by currently licensed waste disposal firms.

A. Every industry, commercial activity or institution which serves meals or washes pots, pans or dishes and has a grease discharge in excess of 50 mg/l shall provide an adequately-sized grease trap to remove kitchen grease prior to discharging to the Town's wastewater collection and treatment system. Such grease traps shall be approved by the Town prior to installation, particularly as to size, design and location.

B. All kitchen grease traps shall be located so as to be readily accessible for cleaning and inspection. The grease traps shall be maintained by the discharger at his or her expense, in continuous and effective operation at all times. No other waste other than grease-laden wastewater shall enter the grease traps.

C. Existing industry, commercial activities or institutions required to install grease traps shall:

1. Install such grease traps on or before June 30, 1987; and

2. Deliver to the POTW Director on or before June 30, 1987, an Affidavit verifying that said business has complied with (c)(1) set forth above. Grease traps shall not be required for private living quarters or dwelling units.

D. If waste possesses characteristics which in the judgment of the POTW Director have a

deleterious effect upon the Town's wastewater treatment system, or create a hazard to life, the POTW Director may:

1. Reject such waste;

2. Require pretreatment of such waste to an acceptable condition for discharge to the public sewers;

3. Require control over the quantities and rates of discharge of such waste; and

4. Require payment to cover the added cost of handling and treating the waste not covered by existing rates, fees or taxes under the provisions of the Town's funding for sewage processing.

E. If the POTW Director permits the pretreatment of waste flows, the design and installation of the plants and equipment shall be subject to the review and approval of the POTW Director, and subject to the requirements of all applicable codes, ordinances and laws. Where preliminary treatment facilities are provided for any water or wastes, they shall be maintained continuously in satisfactory and effective operation by the User at his or her expense.

Section 8-14. Fees.

A. Purpose. It is the purpose of this section to provide for the recovery of costs from Users of the Town's wastewater disposal system for the implementation of the program established herein. The applicable charges or fees shall be set forth in the Town's Schedule of Charges and Fees.

B. Rates in Effect. The unit charges for debt service, operation, maintenance and routine replacement shall consist of a fixed monthly capacity charge and a variable charge based on usage. The rates currently in effect and approved by the Town Council of the Town shall be applied to all units.

C. Excessive Strength Wastewater. The unit charge for wastewater of excessive strength shall be:

1. $0.0376 per pound of Biochemical Oxygen Demand (BOD) in excess of that contained in the volume of wastewater with a BOD concentration of 400 mg/l.

2. $0.0433 per pound of Total Suspended Solids (TSS) in excess of that contained in the volume of wastewater with a TSS concentration of 400 mg/l.

D. All industrial users of the POTW are subject to industrial waste surcharges on discharges which exceed the above limits. The amount of surcharge will be based upon the mass

emission rate (in pounds per day) discharged above the levels listed above. The amount charged per pound of excess has been set forth above.

1. The volume of flow used in determining the total discharge of wastewater for payment of user charges and surcharges shall be based on the following:

   a. Metered water consumption as shown in the records of the meter readings maintained by the Town of Boone; or

   b. If required by the Town or at the individual dischargers option, other flow monitoring devices which measure the actual volume of wastewater discharged to the sewer. Such devices shall be accessible and safely located, and the measuring system shall be installed in accordance with the plans approved by the Town. The metering system shall be installed and maintained at the Users expense according to arrangements that may be made with the Town. Where any User procures all or part of his water supply from sources other than the Town, the User shall install and maintain at his own expense a flow measuring device of a type approved by the Town.

2. The character and concentration of wastewater used in determining surcharges shall be determined by samples collected and analyzed by the Town's personnel. Samples shall be collected in such as manner as to be representative of the actual discharge and shall be analyzed using procedures set forth in 40 CFR Part 136.

3. The determination of the character and concentration of wastewater discharge by the POTW Director or his duly appointed representative shall be binding as a basis for charges.

E. Pretreatment Program Administration Charges.

The Schedule of Charges and Fees adopted by the Town may include charges and fees for:

1. Reimbursement of costs of setting up and operating the Pretreatment Program;

2. Monitoring, inspections and surveillance procedures;

3. Reviewing slug control plans, including accidental and/or slug load discharge procedures and construction plans and specifications;

4. Permitting;

5. Other fees as the Town may deem necessary to carry out the requirements of the Pretreatment Program.

F. Toxic Rates. The unit charge for toxins shall be developed by the Town Manager for each specific applicable user.

F. Monitoring Rate. The unit charge for monitoring shall be developed by the Town Manager for each specific applicable user.

Section 8-15. Wastewater Discharge Permit Application and Issuance.

A. Wastewater Dischargers. It shall be unlawful for any person to connect or discharge to the POTW without first obtaining the permission of the Town of Boone. When requested by the POTW Director, a user must submit information in the nature and characteristics of its wastewater within thirty (30) days of the request. The POTW Director is authorized to prepare a form for this purpose and may periodically require users to update this information.

B. Wastewater Permits. All significant Industrial Users shall obtain a Significant Industrial User permit prior to the commencement of discharge to the POTW. Existing Industrial Users who are determined by the POTW Director to be Significant Industrial Users shall obtain a Significant Industrial User Permit within 180 days of receiving notification of the POTW Directors determination. Industrial Users who do not fit the Significant Industrial user criteria may at the discretion of the POTW Director be required to obtain a wastewater discharge permit for non-significant industrial users.

1. Significant Industrial User Determination. All persons proposing to discharge non-domestic wastewater or proposing to change the volume or characteristics of an existing discharge of non-domestic wastewater shall request from the POTW Director a Significant Industrial User determination. If the POTW Director determines or suspects that the proposed discharge fits the Significant Industrial User criteria he or she will require that a Significant Industrial User permit application be filed.

2. Significant Industrial User Permit Application Users required to obtain a Significant Industrial User Permit shall complete and file with the Town an application in the form prescribed by the POTW Director. Significant Industrial Users shall apply for a Significant Industrial User Permit within 90 days after notification of the POTW Directors determination in 8-25(B)(1) above. In support of the application, the user shall submit, in units and terms appropriate for evaluation, the following information:

a. Name, address and location (if different from the address);

b. SIC number according to the Standard Industrial Classification Manual, Bureau of the Budget, 1972 as amended;

c. Analytical data on wastewater constituents and characteristics including but not limited to those mentioned in Subsection (a) above of this Ordinance and

any of the priority pollutants which the applicant knows or suspects are present in the discharge as determined by a reliable analytical laboratory; sampling and analysis shall be performed in accordance with procedures established by the EPA pursuant to Section 304(g) of the Act and contained in 40 CFR, Part 136, as amended;

d. Time and duration of contribution;

e. Average daily and 30-minute peak wastewater flow rates, including daily, monthly and seasonal variations, if any;

f. Site plans, floor plans, mechanical and plumbing plans and details to show all sewers, floor drains, sewer connections, direction of flow, and appurtenances by the size, location and elevation;

g. Description of activities, facilities and plant processes on the premises including all materials which are or could be discharged;

h. Where known, the nature and concentration of any pollutants in the discharge which are limited by any Town, State or Federal Pretreatment Standards, and a statement regarding whether or not the pretreatment standards are being met on a consistent basis and if not, whether additional Operation and Maintenance (O&M) and/or additional pretreatment is required for the User to meet applicable Pretreatment Standards;

i. If additional pretreatment and/or O&M will be required to meet the Pretreatment Standards, the shortest schedule by which the User will provide such additional pretreatment. The completion date in this schedule shall not be longer than the compliance date established for the applicable pretreatment standard. The following conditions apply to this schedule:

    1. The schedule shall contain the progress increments in the form of dates for the commencement and completion of major events leading to the construction and operation of additional pretreatment required for the user to meet the applicable pretreatment standards. No increment in the schedule shall exceed nine (9) months.

    2. No later than 14 days following each date in the schedule and the final date for compliance, the user shall submit a progress report to the Superintendent including, at a minimum, whether or not it complied with the increment of progress, the reason for any delay, and if appropriate, the steps being taken by the user to return to the established schedule. In no event shall more than nine (9) months elapse between such progress reports to the POTW Director.

j. Each product produced by type, amount, process or processes and rate of production;

k. Type and amount of raw materials processed (average and maximum per day);

l. Number and type of employees, and hours of operation of plant and proposed or actual hours of operation of pretreatment system; and any other information as may be deemed by the POTW Director to be necessary to evaluate the permit application;

m. If subject to a categorical standard, a baseline monitoring report in accordance with 40 CFR 403.12(b) and 15A NCAC 2H .0908(a), as outlined in section 8-16 of this ordinance;

n. Any other information as may be deemed by the POTW Director to be necessary to evaluate the permit application.

3. Application Signatories and Certification. All wastewater discharge permit applications and user reports must be signed by an authorized representative of the user and contain the following certification statement:

> "I certify under penalty of law that this document and all attachments were prepared under my direction or supervision in accordance with a system designed to assure that qualified personnel properly gather and evaluate the information submitted. Based on my inquiry of the person or persons who manage the system, or those persons directly responsible for gathering the information, the information submitted is, to the best of my knowledge and belief, true, accurate, and complete. I am aware that there are significant penalties for submitting false information, including the possibility of fine and imprisonment for knowing violations."

4. Application Review and Evaluation. The POTW Director will evaluate the data furnished by the user and may require additional information.

a. The POTW Director is authorized to accept applications for the Town and shall refer all applications to the POTW staff for review and evaluation.

b. Within thirty (30) days of receipt, the POTW Director shall acknowledge and accept the complete application; or if not complete, shall return the application to the applicant with a statement of what additional information is required.

5. Tentative Determination and Draft Permit.

a. The POTW staff shall conduct a review of the application and an on-site inspection of the Significant Industrial User, including any pretreatment facilities, and shall prepare a written evaluation and tentative determination to issue or deny the Significant Industrial User permit.

b. If the staffs tentative determination in Paragraph (1) above is to issue the permit, the following additional determinations shall be made in writing:

1. Proposed discharge limitations for those pollutants proposed to be limited;

2. A proposed schedule of compliance, including interim dates and requirements, for meeting the proposed limitations; and,

3. A brief description of any other proposed special conditions which will have significant impact upon the discharge described in the application.

c. The staff shall organize the determinations made pursuant to Paragraphs (1) and (2) above and the Town's general permit conditions into a Significant Industrial User permit.

6. Permit Synopsis. A fact sheet providing a brief synopsis of the application shall be prepared by the POTW staff for submission to the applicant and the Approval Authority and shall be made available to the public upon request. The contents of such fact sheets shall include at least the following information:

a. A sketch and detailed description of the industrial facilities and pretreatment facilities including the location of all points of discharge to the POTW and all established compliance monitoring points;

b. A quantitative description of the discharge described in the application which includes at least the following:

1. The rate or frequency of the proposed discharge; if the discharge is continuous, the average daily flow;

2. The actual average daily discharge in pounds per day of any limited pollutant and any pollutant identified in the application as known or suspected present; and,

3. The basis for the pretreatment limitations including the documentation of any calculations in applying categorical pretreatment standards.

7. Hearings.

a. Initial Adjudicatory Hearings. An applicant whose permit is denied, or is granted subject to conditions he deems unacceptable, a permittee/user assessed a civil penalty under section 8-19(B), or one issued an administrative order under section 8-19(A) shall have the right to an adjudicatory hearing before a hearing officer designated by the POTW Director upon making written demand, identifying the specific issues to be contested , to the POTW Director within 30 days following receipt of the Significant Industrial User permit, civil penalty assessment, or administrative order. Unless such written demand is made within the time specified herein, the action shall be final and binding. The hearing officer shall make a final decision on the contested permit, penalty, or order within 45 days of the receipt of the written demand for a hearing. The POTW Director shall transmit a copy of the hearing officer's decision by registered or certified mail.

1. New Permits: Upon appeal, including judicial review in the General Courts of Justice, of the terms or conditions of a newly issued permit, the terms and conditions of the entire permit are stayed and the permit is not in effect until either the conclusion of judicial review or until the parties reach a mutual resolution.

2. Renewed Permits: Upon appeal, including judicial review in the General Courts of Justice, of the terms or conditions of a renewed permit, the terms and conditions of the existing permit remain in effect until either the conclusion of judicial review or until the parties reach a mutual resolution.

b. Final Appeal Hearings. Any decision of a hearing officer made as a result of an adjudicatory hearing held under section 8-15(B)(7)(a) above may be appealed to the Boone Town Council upon filing a written demand within ten (10) days of receipt of notice of the decision. Failure to make written demand within the time specified herein shall bar further appeal. The Town council shall make a final decision on the appeal within 90 days of the date the appeal was filed and shall transmit a written copy of its decision by registered of certified mail.

c. Official record: When a final decision is issued under section 8-15(B)(7)(b) above, the Town council shall prepare an official record of the case that includes:

1. All notices, motions, and other like pleadings;

2. A copy of all documentary evidence introduced;

3. A certified transcript of all testimony taken, if testimony is transcribed. If testimony is taken and not transcribed, then a narrative summary of any testimony taken.

4. A copy of the final decision of the Town Council.

d. Judicial Review: Any person against whom a final order or decision of the Town Council is entered pursuant to the hearing conducted under section 8-15(B)(7)(b) above may seek judicial review of the order or decision by filing a written petition within thirty (30) days after receipt of notice by registered or certified mail of the order or decision, but not thereafter, with the Superior Court of Watauga County along with a copy to the Town. Within 30 days after receipt of the copy of the petition of judicial review, the Town council shall transmit to the reviewing court the original or a certified copy of the official record.

8. Final Action on Significant Industrial User Permit Applications.

a. The POTW Director shall take final action on all applications not later than 90 days following receipt of a complete application.

b. The POTW Director is authorized to:

1. Issue a Significant Industrial User permit containing such conditions as are necessary to effect the purposes of this Ordinance and N.C.G.S. 143-215.1;

2. Issue a Significant Industrial User permit containing time schedules for achieving compliance with applicable pretreatment standards and requirements;

3. Modify any permit upon not less than sixty (60) days notice and pursuant to section 8-15(B)(9) hereinafter set forth;

4. Revoke any permit pursuant to Section 8-19 of this Ordinance;

5. Suspend a permit pursuant to Section 8-19 of this Ordinance;

6. Deny a permit application when in the opinion of the POTW Director such discharge may cause or contribute to pass-through or interference of the wastewater treatment plant or where necessary to effect the purposes of G.S. 143-215.1.

9. Permit Modification.

a. Modifications of permits shall be subject to the same procedural requirements as the issuance of permits except as follows:

1. Changes in the ownership of the discharge when no other change in the permit is indicated;

2. A single modification of any compliance schedule not in excess of four (4) months;

3. Modification of compliance schedules (construction schedules) in permits for new sources where the new source will not begin to discharge until control facilities are operational.

Any changes or new conditions in the permit shall include a reasonable time schedule for compliance.

b. Within nine (9) months of the promulgation of a National Categorical Standard, the Wastewater discharge Permit of Users subject to such standards shall be revised to require compliance with such standard within the time frame prescribed by such standard. Where a User, subject to a National Categorical Pretreatment Standard, has not previously submitted an application for a Wastewater Discharge Permit as required by Section 8-15(B) , the User shall apply for a Wastewater discharge Permit within 180 days after the promulgation of the Applicable National Categorical Pretreatment Standard.

c. A request for a modification by the permittee shall constitute a waiver of the sixty (60) day notice required by G.S. 315.1(b) for modifications.

10. Permit Conditions.

The POTW Director shall have the authority to grant a permit with such conditions attached as he believes necessary to achieve the purpose of this Ordinance and N.C.G.S. 143-215.1 such conditions shall include but are not limited to the following:

a. A statement of duration (in no case more than five (5) years);

b. A statement of non-transferability;

c. Applicable effluent limits based on categorical standards or local limits or both;

d. Applicable monitoring and reporting requirements;

e. Notification requirements for slug loads; and,

f. A statement of applicable civil and criminal penalties for violation of pretreatment standards and requirements.

11. Permit Duration.

Permits shall be issued for a specified time period, not to exceed five (5) years. A permit may be issued for a period less than a year or may be stated to expire on a specific date. The User shall apply for permit reissuance a minimum of 180 days prior to the expiration of the Users existing permit.

12. Permit Transfer.

Wastewater Discharge Permits are issued to a specific User for a specific operation. A wastewater discharge permit shall not be reassigned or transferred to sold to a new owner, new User, different premises or a new or changed operation.

13. Permit Reissuance.

A significant industrial user shall apply for permit reissuance by submitting a complete application, in accordance with section 8-15(B) in a minimum of 180 days prior to the expiration of the existing permit.

Section 8-16. Reporting Requirements.

A. Baseline Monitoring Reports.

1. Within either one hundred eighty (180) days after the effective date of a categorical pretreatment standard, or the final administrative decision on a category determination under 40 CFR 403.6(a)(4), whichever is later, existing categorical users currently discharging to or scheduled to discharge to the POTW shall submit to the POTW Director a report which contains the information listed in paragraph 2, below. At least ninety (90) days prior to commencement of their discharge, new sources, and sources that become categorical users subsequent to the promulgation of an applicable categorical standard, shall submit to the POTW Director a report which contains the information listed in paragraph 2, below. A new source shall report the method of pretreatment or intends to use to meet applicable categorical standards. A new source also shall give estimates of its anticipated flow and quantity of pollutants to be discharged.

2. Users described above shall submit the information set forth below:

a. Identifying Information: The name and address of the facility, including the name of the operator owner.

b. Environmental Permits: A list of any environmental control permits held by of for the facility.

c. Description of Operations: A brief description of the nature, average rate of production, and standard industrial classifications of the operations carried out by such user. This description should include a discharge to the POTW from the regulated processes.

d. Flow Measurement: Information showing the measured average daily and maximum daily flow, in gallons per day, to the POTW from regulated process streams and other streams, as necessary, to allow use of the combined wastestream formula set out in 40 CFR 403.6(e).

e. Measurement of Pollutants:

1. The categorical pretreatment standards applicable to each regulated process.

2. The results of sampling and analysis identifying the nature and concentration, and/or mass, where required by the standard or by the POTW Director, of regulated pollutants in the discharge from each regulated process. Instantaneous, daily maximum, and long-term average concentrations, or mass, where required, shall be reported. The sample shall be representative of daily operations and shall be analyzed on accordance with procedures set out in section 8-16 of this ordinance.

3. Sampling must be performed in accordance with procedures set out in section 8-16(K) of this ordinance.

f. Certification: A statement, reviewed by the user's authorized representative and certified by a qualified professional, indicating whether pretreatment standards are being met on a consistent basis, and, if not, whether additional operation and maintenance (O&M) and/or additional pretreatment is required to meet the pretreatment standards and requirements.

g. Compliance Schedule: If additional pretreatment and/or O&M will be required to meet the pretreatment standards, the shortest schedule by which the user will provide such additional pretreatment and/or O&M. The completion date in this schedule shall not be later than the compliance date established for the applicable pretreatment standard. A compliance schedule

pursuant to this section must meet the requirements set out in section 8-16(B) of this ordinance.

h. Signature and Certification: All baseline monitoring reports must be signed and certified in accordance with section 22-8B1 of this ordinance.

B. Compliance Schedule Progress Reports.

The following conditions shall apply to the compliance schedule required by section 8-16(A)(2)(g) of this ordinance:

1. The schedule shall contain progress increments in the form of dates for the commencement and completion of major events leading to the construction and operation of additional pretreatment required for the user to meet the applicable pretreatment standards (such events include, but are not limited to, hiring an engineer, completing preliminary and final plans, executing contracts for major components, commencing and completing construction, and beginning and conducting routine operation);

2. No increment referred to above shall exceed nine (9) months;

3. The user shall submit a progress report to the POTW Director on later than fourteen (14) days following each date of compliance including, as a minimum, whether or not it complied with the increment of progress, the reason for any delay, and, if appropriate, the steps being taken by the user to return to the established schedule; and

4. In no event shall more than nine (9) months elapse between such progress reports to the POTW Director.

C. Reports on Compliance with Categorical; Pretreatment Standard Deadline.

Within ninety (90) days following the date for final compliance with applicable categorical pretreatment standards, or in the case of a new source following commencement of the introduction of wastewater into the POTW, any user subject to such pretreatment standards and requirements shall submit to the POTW Director a report containing the information described in section 8-16(A)(2)(d-f) of this ordinance. For users subject to equivalent mass or concentration limits established in accordance with the procedures in 40 CFR 403.6(c), this report shall contain a reasonable measure of the user's long-term production rate. For all other users subject to categorical pretreatment standards expressed in terms of allowable pollutant discharge per unit of production (or other measure of operation), this report shall include the user's actual production during the appropriate sampling period. All compliance reports must be signed and certified in accordance with section 8-15(B)(3) of this ordinance.

D. Periodic Compliance Reports.

1. All significant industrial users shall, at a frequency determined by the POTW Director but in no case less than twice per year (in June and December), submit a report indicating the nature and concentration of pollutants in the discharge which are limited by pretreatment standards and the measured or estimated average and maximum daily flows for the reporting period. All periodic compliance reports must be signed and certified in accordance with section 22-8B3 of this ordinance.

2. All wastewater samples must be representative of the user's discharge. Wastewater monitoring and flow measurement facilities shall be properly operated, kept clean, and maintained in good working order at all times. The failure of a user to keep its monitoring facility in good working order shall not be grounds for the user to claim that sample results are unrepresentative of its discharge.

3. If a user subject to the reporting requirement in this section monitors any pollutant more frequently than required by the POTW Director, using the procedures prescribed in section 8-16(J) of this ordinance, the results of this monitoring shall be included in the report.

E. Reports of Changed Conditions.

Each user must notify the POTW Director of any planned significant changes to the user's operations or system which might alter the nature, quality, or volume of its wastewater at least thirty (30) days before the change.

1. The POTW Director may require the user to submit such information as may be deemed necessary to evaluate the change condition, including the submission of a wastewater discharge permit application under section 8-15(B) of this ordinance.

2. The POTW Director may issue a wastewater discharge permit under section 8-15(B) of this ordinance or modify an existing wastewater discharge permit under section 22-8B of this ordinance in response to changed conditions or anticipated changed conditions.

3. For purposes of this requirement, significant changes include, but are not limited to, flow increases of twenty percent (20%) or greater, and the discharge of any previously unreported pollutants.

F. Reports of Potential Problems.

1. In the case of any discharge, including, but not limited to, accidental discharges, discharges of a nonroutine, episodic nature, a noncustomary batch discharge of a slug load, that may cause potential problems for the POTW, the user shall immediately

telephone and notify the POTW Director of the incident. This notification shall include the location of the discharge, type of waste, concentration and volume, of known, and corrective actions taken by the user.

2. Within five (5) days following such discharge, the user shall, unless waived by the POTW Director, submit a detailed written report describing the causes of the discharge and the measures to be taken by the user to prevent similar future occurrences. Such notification shall not relieve the user of any expense, loss, damage to the POTW, natural resources, or any other liability which may be incurred as a result of damage to the POTW, natural resources, or any other damage to person or property; nor shall such notification relieve the user of any fines, penalties, or other liability which may be imposed pursuant to this ordinance.

3. A notice shall be permanently posted on the user's bulletin board or other prominent place advising employees whom to call in the event of a discharge described in paragraph 1, above. Employers shall ensure that all employees, who may cause such a discharge to occur, are advised of the emergency notification procedure.

G. Reports from Unpermitted Users.

All users not required to obtain a wastewater discharge permit shall provide appropriate reports to the POTW Director as the POTW Director may require.

H. Notice of Violation/Repeat Sampling and Reporting.

If sampling performed by a user indicates a violation, the user must notify the POTW Director within twenty-four (24) hours of becoming aware of the violation. The user shall also repeat the sampling and analysis and submit the results of the repeat analysis to the POTW Director within thirty (30) days after becoming aware of the violation. The user is not required to resample if the POTW Director monitors at the user's facility at least once a month, or if the POTW Director samples between the user's initial sampling and when the user receives the results of the resample.

I. Notification of the Discharge of Hazardous Waste.

1. Any user who commences the discharge of hazardous waste shall notify the POTW, the EPA Regional Waste Management Division Director, and State hazardous waste authorities, in writing, of any discharge into the POTW of a substance which, of otherwise disposed of, would be a hazardous waste under 40 CFR Part 261. Such notification must include the name of the hazardous waste as set forth in 40 CFR Part 261, the EPA hazardous waste number, and the type of discharge (continuous, batch, or other). If the user discharges more than one hundred (100) kilograms of such waste per calendar month to the POTW, the notification also shall contain the following information to the extent such information is known and readily available

to the user: an identification of the hazardous constituents contained in the wastes, an estimation of the mass and concentration of such constituents in the wastestream discharge during the calendar month, and an estimation of the mass of constituents in the wastestream expected to be discharged during the following twelve (12) months. All notifications must take place no later than one hundred and eighty (180) days after the discharge commences. Any notification under this paragraph need be submitted only once for each hazardous waste discharge. However, notifications of changed conditions must be submitted under section 8-17 of this ordinance. The notification requirement in this section does not apply to pollutants already reported by users subject to categorical pretreatment standards under the self-monitoring requirements of sections 8-26(A),(C), and (D) of this ordinance.

2. Dischargers are exempt from the requirements of paragraph 1, above, during a calendar month in which they discharge on more than fifteen (15) kilograms of hazardous wastes, unless the wastes are acute hazardous wastes as specific in 40 CFR 261.30(d) and 261.33(e). Discharge of more than fifteen (15) kilograms of nonacute hazardous wastes in a calendar month, or of any quantity of acute hazardous wastes as specified in 40 CFR 261.30(d) and 261.33(e), requires a one-time notification. Subsequent months during which the user discharges more than such quantities of any hazardous waste do not require additional notification.

3. In the case of any new regulation under section 3001 of RCRA identifying additional characteristics of hazardous waste or listing any additional substance as a hazardous waste, the user must notify the POTW Director, the EPA Regional Waste Management Waste Division Director, and State hazardous waste authorities of the discharge of such substance within ninety (90) days of the effective date of such regulations.

4. In the case of any notification made under this section, the user shall certify that it has a program in place to reduce the volume and toxicity of hazardous wastes generated to the degree it has determined to be economically practical.

5. This provision does not create a right to discharge any substance not otherwise permitted to be discharged by this ordinance, a permit issued thereunder, or any applicable Federal or State law.

J. Analytical Requirements.

All pollutant analyses, including sampling techniques, to be submitted as part of a wastewater discharge permit application or report shall be performed in accordance with the techniques prescribed in 40 CFR Part 136, unless otherwise specified in an applicable categorical pretreatment standard. If 40 CFR Part 136 does not contain sampling or analytical techniques for the pollutant in question, sampling and analyses must be performed in accordance with procedures approved by EPA.

K. Sample Collection.

1. Except as indicated in section 2, below, the user must collect wastewater samples using flow proportional composite collection techniques. In the event flow proportional sampling is infeasible, the POTW Director may authorize the use of time proportional sampling or a minimum of four (4) grab samples where the user demonstrates that this will provide a representative samples may be requires to show compliance with instantaneous discharge limits.

2. Samples for oil and grease, temperature, pH, cyanide, phenols, sulfides, and volatile organic compounds must be obtained using grab collection techniques.

L. Timing.

Written reports will be deemed to have been submitted on the date postmarked. For reports which are not mailed, postage prepaid, into a mail facility serviced by the United States Postal Service, the date of receipt of the report shall govern.

M. Users subject to the reporting requirements of this ordinance shall retain, and make available for inspection and copying, all records of information obtained pursuant to any monitoring activities required by this ordinance and any additional records of information attained pursuant to monitoring activities undertaken by the user independent of such requirements, Records shall include the date, exact place, method, and time of sampling, and the name of the person(s) taking the samples; the dates analyses were preformed; who performed the analyses; the analytical techniques or methods used; and the results of such analyses. These records shall remain available for a period of at least three (3) years. This period shall be automatically extended for the duration of any litigation concerning the user or the Town, or where the user has been specifically notified of a longer retention period by the POTW Director.

Section 8-17. Compliance Monitoring.

A. Monitoring Facilities.

The Town requires the User to provide and operate at the Users own expense, monitoring facilities to allow inspection, sampling and flow measurement of the building sewer and/or internal drainage systems. The monitoring facility should normally be situated on the Users premises, but the Town may, when such a location would be impractical or cause undue hardship on the User, allow the facility to be constructed in the public street or sidewalk area and located so that it will not be obstructed by landscaping or parked vehicles. There shall be ample room in or near such sampling manhole or facility to allow accurate sampling and preparation of samples for analysis. The facility, sampling and measuring equipment shall be maintained at all times in a safe and proper operating condition at the expense of the User. Whether constructed on public or private property, the sampling and monitoring facilities

shall be provided in accordance with the Town's requirements and all applicable local construction standards and specifications. Construction shall be completed within ninety (90) days following written notification by the Town.

B. Inspection and Sampling.

The Town shall inspect the facilities of any User to ascertain whether the purpose of this Ordinance is being met and all requirements are being complied with. Persons or occupants of premises where wastewater is created or discharged shall allow the Town, approved authority and EPA, or their representative ready access at all reasonable times to all parts of the premises for the purposes of inspection, sampling, records examination or in the performance of their duties. The Town, Approval Authority and EPA shall have the right to set up on the Users property such devices as are necessary to conduct sampling inspection, compliance monitoring and/or metering operations. Where a User has security measures in force which would require proper identification and clearance before entry into their premises, the User shall make necessary arrangements with their security guards so that upon presentation of suitable identification, personnel from the Town, Approval Authority and EPA will be permitted to enter, without delay, for the purposes of performing their specific responsibilities. Denial of the POTW Director's approval authority's or EPA's access to the user's premises shall be a violation of this ordinance. Unreasonable delays may constitute denial access.

C. Search Warrants.

If the refused access to a building, structure, or property, or any part thereof, and the POTW Director, Approval Authority or EPA is able to demonstrate probable cause to believe that there may be a violation of this ordinance, or that there is a need to inspect and/or sample as part of a routine inspection and sampling program of the Town designed to verify compliance with this ordinance or any permit or order issued hereunder, or to protect the overall public health, safety and welfare of the community, then the POTW Director, Approval Authority, or EPA may seek issuance of a search warrant from the Watauga County Court House of the Town.

Section 8-18. Confidential Information.

Information and data on a User obtained from reports, questionnaires, permit applications, permits and monitoring programs and from inspections shall be available to the public or other governmental agency without restriction unless the User specifically requests and is able to demonstrate to the satisfaction of the POTW Director that the release of such information would divulge information, processes or methods of production entitled to protection as trade secrets of the User. Any such request must be asserted at the time of submission of the information or data.

When requested by the person furnishing a report, the portions of a report which might

disclose trade secrets or secret processes shall not be made available for inspection by the public but shall be made available upon written request to governmental agencies for uses related to this Ordinance, the National Pollutant Discharge Elimination System (NPDES) Permit, State Disposal System permit and/or the Pretreatment Program; provided, however, that such portions of a report shall be available for use by the State or any state agency in judicial review or enforcement proceedings involving the person furnishing the report. Wastewater constituents and characteristics will not be recognized as confidential information. Information accepted as confidential shall not be transmitted to any governmental agency or to the general public by the Town until and unless a ten-day notification is given to the User.

All records relating to compliance with Pretreatment Standards shall be made available to officials of the Approval authority and EPA upon request.

Section 8-19. Enforcement.

A. Administrative Remedies.

1. Notification of Violation.

Whenever the POTW Director finds that any industrial User has violated or is violating this Ordinance, Wastewater Contributor Permit, or any prohibition, limitation or requirements contained therein, the POTW Director may serve upon such a person a written notice stating the nature of the violation. Within thirty (30) days from the date of that notice, a plan for the satisfactory correction thereof shall be submitted to the Town by the User. Submission of this plan does not relieve the discharger of liability for any violations occurring before or after receipt of the Notice of Violation.

2. Consent Orders.

The POTW Director is hereby empowered to enter into consent orders, assurances of voluntary compliance, or other similar documents establishing an agreement with the person responsible for the noncompliance. Such orders will include specific action to be taken by the discharger to correct the noncompliance within a time period also specified by the order. Consent Orders shall have the same force and effect as an Administrative Order issued pursuant to Subsection (4) below.

3. Show Cause Hearing.

The POTW Director may order any industrial user who causes or is responsible for an unauthorized discharge, has violated this Ordinance or is in noncompliance with a Wastewater discharge Permit to show cause why a proposed enforcement action should not be taken. In the event the POTW Director determines that a show cause

order should be issued, a notice shall be served on the User specifying the time and place for the hearing, the proposed enforcement action, the reasons for such action, and a request that the User how cause why this proposed enforcement action should not be taken. The notice of the hearing shall be served personally or by registered or certified mail (return receipt requested) at least ten (10) days before the hearing. Service may be made on any agent or officer of a corporation.

The POTW Director shall review the evidence presented at the hearing and determine whether the proposed enforcement action is appropriate.

A show cause hearing under this section is not a prerequisite to the assessment of a civil penalty under section 8-18(B) nor is any action or inaction taken by the POTW Director under this section subject to an administrative appeal under section 8-15(B)(1).

4. Administrative Orders.

When the POTW Director finds that discharge violates the prohibitions or effluent limitations of this Ordinance, or those contained in any permit issued hereunder, the POTW Director may issue an order to cease and desist,and direct those persons in noncompliance to do any of the following:

a. Comply forthwith;

b. Comply in accordance with a compliance time scheduled set forth in the order;

c. Take appropriate remedial or preventative action in the event of a continuing or threatened violation;

d. Disconnect unless adequate treatment facilities, devices or other related appurtenances are installed and properly operated within a specified time period.

5. Emergency Suspensions.

The POTW Director may suspend the wastewater treatment service and/or wastewater permit when such suspension is necessary in order to stop an actual or threatened discharge which presents or may present an imminent or substantial endangerment to the health or welfare of persons or the environment, interferes with the POTW or causes the POTW to violate any condition of its NPDES permit.

Any user notified of a suspension of the wastewater treatment service and/or the wastewater permit shall immediately stop or eliminate the contribution. A hearing

will beheld within fifteen (15) days of the Notice of Suspension to determine whether the suspension may be lifted or the users waste discharge permit terminated. In the event of a failure of the person to comply voluntarily with the suspension order, the POTW Director shall take such steps as deemed necessary including immediate severance of the sewer connection, to prevent or minimize damage to the POTW system or endangerment to any individuals. The POTW Director shall reinstate the wastewater permit and the wastewater treatment service upon proof of the elimination of the noncompliance discharge. The industrial user shall submit a detailed written statement describing the causes of the harmful contribution and the measures taken to prevent any future occurrence to the POTW Director prior to the date of the above-described hearing.

6. Termination of Permit.

Any user who violates the following conditions of this Ordinance, or applicable State and Federal regulations, is subject to having its permit terminated:

a. Failure to factually report the wastewater constituents and characteristics of his discharge;

b. Failure to report significant changes in operations, or wastewater constituents and characteristics;

c. Refusal for reasonable access to the Users premises for the purpose of inspection or monitoring; or,

d. Violations of conditions of the permit.

Noncompliant industrial users will be notified of the proposed termination of their wastewater permit and will be offered an opportunity to show cause under section 8-18(A) of this ordinance why the proposed action should not be taken.

B. Civil Penalties.

1. Any user who is found to have failed to comply with any provision of this Ordinance, or the orders, rules, regulations and permits issued hereunder, may be fined up to ten thousand dollars ($10,000) per day per violation.

2. In determining the amount of the civil penalty, the POTW Director shall consider the following:

a. The degree and extent of the harm to the natural resources, to the public health, or to public or private property resulting from the violation;

b. The duration and gravity of the violation;

c. The effect on ground or surface water quantity or quality or on air quality;

d. The cost of rectifying the damage;

e. The amount of money saved by noncompliance;

f. Whether the violation was committed willfully or intentionally;

g. The prior record of the violator in complying or failing to comply with the pretreatment program;

h. The cost of enforcement to the Town.

3. Appeals of civil penalties assessed in accordance with this section shall be as provided in section 8-15(B)(8).

C. Other Available Remedies.

Remedies, in addition to those previously mentioned in this ordinance, are available to the POTW Director who may use any single one or combination against a noncompliant user. Additional available remedies include, but are not limited to:

1. Criminal Violations.

The District Attorney for the Boone Judicial District may, at the request of the Town, prosecute noncompliant users who violate the provisions of N.C.G.S. 143-215.6B.

2. Injunctive Relief.

Whenever an industrial user is in violation of the provisions of this Ordinance or an order or permit issued hereunder, the POTW Director, through the Town Attorney, may petition the Superior Court of Justice for the issuance of a restraining order or a preliminary and permanent injunction, which restrains or compels the activities in question.

3. Performance Bonds.

The POTW Director may refuse to reissue a permit to any industrial User which has failed to comply with the provisions of this Ordinance or any order or previous permit issued hereunder unless such User first files with it a satisfactory bond, payable to the POTW, in a sum not to exceed a value determined by the POTW Director to be necessary to achieve consistent compliance.

4. Water Supply Severance.

Whenever an industrial user is in violation of the provisions of this Ordinance or an order or permit issued hereunder, water service to the industrial User may be severed and service will only recommence, at the Users expense, after it has satisfactorily demonstrated ability to comply.

5. Public Nuisances.

Any violation of the prohibitions or effluent limitations of this Ordinance or contained in a permit or order issued hereunder, is hereby declared a public nuisance and shall be corrected or abated as directed by the POTW director.

D. Remedies Nonexclusive.

The remedies provided for in this ordinance are not exclusive. The POTW Director may take any, all, or any combination of these actions against a noncompliant user. Enforcement of pretreatment violations will generally be in accordance with the Town's enforcement response plan. However, the POTW Director may take other action against any user when the circumstances warrant. Further, the POTW Director is empowered to take more than one enforcement action against any noncompliant user.

Section 8-20. Annual Publication of Significant Noncompliance.

At least annually, the POTW Director shall publish in the largest daily newspaper circulated in the service area, a list of those industrial users which were found to be in significant noncompliance, also referred to as reportable noncompliance in 15A NCAC 2H.0903(b)(10), with applicable pretreatment standards and requirements, during the previous 12 months.

Section 8-21. Affirmative Defenses to Discharge Violations.

A. Upset.

1. An upset shall constitute an affirmative defense to an action brought for noncompliance of paragraph 2, below, are met.

2. A user who wishes to establish the affirmative defense of upset shall demonstrate, through properly signed, contemporaneous operating logs, or other relevant evidence that:

a. An upset occurred and the user can identify the cause(s) of the upset;

b. The facility was at the time being operated in a prudent and workman-like manner and in compliance with applicable operation and maintenance

procedures; and

c. The user has submitted the following information to the POTW Director within twenty-four (24) hours of becoming aware of the upset:

1. A description of the indirect discharge and cause of noncompliance;

2. The period of noncompliance, including exact dates and times or, if not corrected, the anticipated time the noncompliance is expected to continue; and

3. Steps being taken and/or planned to reduce, eliminate, and prevent recurrence of the noncompliance.

3. In any enforcement proceeding, the user seeking to establish the occurrence of an upset shall have the burden of proof.

4. Users will have the opportunity for a judicial determination on any claim of upset only in an enforcement action brought for noncompliance with categorical pretreatment standards.

5. Users shall control production of all discharges to the extent necessary to maintain compliance with categorical pretreatment standards upon reduction, loss, or failure of its treatment facility until the facility is restored or an alternative method of treatment is provided. This requirement applies in the situation where, among other things, the primary source of power of the treatment facility is reduced, lost, or fails.

B. Prohibited Discharge Standards Defense.

A user shall have an affirmative defense to an enforcement action brought against or for noncompliance with the general prohibitions in section 8-4(A)(1) of this ordinance or the specific prohibitions in sections 8-4(A)(2)(b), (c), and (e-g) of this ordinance of or can prove that it did not know, or have reason to know, that its discharge, alone or in conjunction with discharges from other sources, would cause pass through or interference and that either:

1. A local limit exists for each pollutant discharge and the user was in compliance with each limit directly prior to, and during, the pass through or interference; or

2. No local limit exists, but the discharge did not change substantially in nature or constituents from the user's prior discharge when the Town was regularly in compliance with its NPDES permit, and in the case of interference, was in compliance with applicable sludge use or disposal requirements.

C. Bypass.

1. A user may allow any bypass to occur which does not cause pretreatment standards or requirements to be violated, but only if it also is for essential maintenance to assure efficient operation. These bypasses are not subject to the provision of paragraphs 2 and 3 of this section.

2. If a user knows in advance of the need for a bypass, it shall submit prior notice to the POTW Director, at least ten (10) days before the date of the bypass, if possible.

   A user shall submit oral notice to the POTW Director of an unanticipated bypass that exceeds applicable pretreatment standards within twenty-four (24) hours from the time it becomes aware of the bypass. A written submission shall contain a description of the bypass and its cause; the duration of the bypass, including exact dates and times, and, if the bypass has not been corrected, the anticipated tome it is expected to continue; and steps taken or planned to reduce, eliminate, and prevent reoccurrence of the bypass. The POTW Director may waive the written report on a case-by-case basis if the oral report has been received within twenty-four (24) hours.

3. Bypass is prohibited, and the POTW Director may take and enforcement action against a user for a bypass, unless

   a. Bypass was unavoidable to prevent loss of life, personal injury, or severe property damage;

   b. There were no feasible alternatives to the bypass, such as the use of auxiliary treatment facilities, retention of untreated wastes, or maintenance during normal periods of equipment downtime. This condition is not satisfied if adequate back-up equipment should have been installed in the exercise of reasonable engineering judgment to prevent a bypass which occurred during normal periods of equipment downtime or preventive maintenance; and

   c. The user submitted notices as required under paragraph 2 of this section.

   The POTW Director may approve an anticipated bypass, after considering its adverse effects, if the POTW Director determines that it will meet the three conditions listed in paragraph 3(a) of this section.

Section 8-22. Severability.

If any provision, paragraph, work, section or article of this Ordinance is invalidated by any court of competent jurisdiction, the remaining provisions, paragraphs, words, sections and chapters shall not be affected and shall continue in full force and effect.

Section 8-23. Conflict

All other Ordinances and parts of other Ordinances inconsistent or conflicting with any part of this Ordinance are hereby repealed to the extent of such inconsistency or conflict.

Section 8-24 to 8-26 Reserved.

ARTICLE IX
CROSS CONNECTION CONTROL STANDARDS

Be it ordained by the Town Council of the Town of Boone that Article IX of the Town of Boone Water and Sewer Use Ordinance, Town of Boone, Boone, North Carolina, is hereby created as follows:

Section 9-1. Introduction.

The purpose of this Cross Connection Control Ordinance is to define the authority of the Public Utilities Department of the Town of Boone as the water purveyor in the elimination of all cross connections within its public potable water supply.

This Ordinance shall apply to all users connected to the Town of Boone potable water supply regardless of whether the user is located within the city limits or outside of the city limits.

This Ordinance will comply with the Federal Safe Drinking Water Act (P.L. 93-523), the North Carolina State Administrative Code (Title 15A, Subchapter 8C), and the North Carolina State Building Code (Volume II) as they pertain to cross connections with the public water supply.

Section 9-2. Objectives of Ordinance.

The specific objectives of the Cross Connection Control Ordinance are as follows:

A. To protect the public potable water supply of the Town of Boone against actual or potential contamination by isolating within the consumer's water system, contaminants or pollutants which could, under adverse conditions, backflow through uncontrolled cross connections into the public water system.

B. To eliminate or control existing cross connections, actual or potential, between the consumer's potable water system(s) and non- potable or industrial piping system(s).

C. To provide a continuing inspection program of cross connection control which will systematically and effectively control all actual or potential cross connections which may be installed in the future.

Section 9-3 Responsibilities.

Responsibility: Town of Boone

Except as, otherwise provided herein, it is the Town of Boone's responsibility to ensure a safe water supply, which begins at the source and includes all of the public water distribution system, including the service connection, and ends at the point of delivery to the consumer's water system (water meter). In addition, the Town of Boone shall exercise reasonable vigilance to ensure that

the consumer has taken the proper steps to protect the public potable water system. To ensure that the proper precautions are taken, the Public Utilities Department shall determine the degree of hazard or potential hazard to the public potable water system; the degree of protection required; and proper containment protection through an on-going inspection program.

When it is determined that a backflow prevention assembly is required for the protection of the public system, the Town of Boone shall require the consumer, at the consumer's expense, to install an approved backflow prevention assembly at each service connection, to test immediately upon installation and thereafter at a frequency as determined by the Public Utilities Department , to properly repair and maintain such assembly or assemblies and to keep adequate records of each test and subsequent maintenance and repair, including materials and/or replacement parts.

Responsibility: Plumbing Inspections

The Department of Planning and Inspections and the Department of Public Utilities for the Town of Boone shall review building plans and inspect plumbing as it is installed and shall prevent cross connections from being designed and built into any plumbing system within the Department of Planning & Inspection's jurisdiction. Where the review of building plans suggests or detects the potential for cross connections being made an integral part of the plumbing system, the plumbing inspector shall require that such cross connections be either eliminated or provided with backflow prevention equipment approved by the North Carolina Building Code.

The plumbing inspector's responsibility begins at the point of delivery (downstream of the first installed backflow prevention assembly) and continues throughout the entire length of the consumer's water system. The plan inspector should inquire about the intended use of water at any point where it is suspected that a cross connection might be made or where one is actually called for by the plans. When such is discovered, it shall be mandatory that a suitable, approved backflow prevention assembly approved by the North Carolina Building Code be required by the plans and be properly installed. The primary protection assembly for containment purposes only shall have approval from the Town of Boone's Public Utilities Department, the North Carolina Building Code, and the North Carolina Department of Environment, Health, and Natural Resources.

Responsibility: Consumer

The consumer has the primary responsibility of preventing pollutants and contaminants from entering his potable water system(s) or the public potable water system. The consumer's responsibility starts at the point of delivery from the public potable water system and includes all of his water system(s). The consumer, at his own expense, shall install, operate, test, and maintain approved backflow prevention assemblies as directed by the Town of Boone's Public Utilities Department. The consumer shall maintain accurate records of tests and repairs made to backflow prevention assemblies and shall maintain such records for a minimum period of three (3) years. The records shall be on forms approved by Town of Boone Public Utilities Department, and shall include the list of materials or replacement parts used. Following any repair, overhaul,

repiping or relocation of an assembly, the Town of Boone shall test it to ensure that it is in good operating condition and will prevent backflow. Tests, maintenance and repairs of backflow prevention assemblies shall be made by a certified backflow prevention assembly tester employed by the Town of Boone.

Responsibility: Certified Backflow Prevention Assembly Tester

The certified backflow prevention assembly tester will have the following responsibilities:

a) making competent inspections and for repairing or overhauling backflow prevention assemblies and making reports of such repair to the consumer and responsible authorities on forms approved by the Town of Boone's Public Utilities Department .
b) Including the list of materials or replacement parts used.
c) Being equipped with and being competent to use all the necessary tools, gauges, manometers and other equipment necessary to properly test, repair, and maintain backflow prevention assemblies.
d) Ensuring that original manufactured parts are used in the repair of or replacement of parts in a backflow prevention assembly. The tester shall not change the design, material or operational characteristics of an assembly during repair or maintenance without prior approval of the Town of Boone's Public Utilities Department. The tester shall perform the work and be responsible for the competency and accuracy of all tests and reports. The tester shall provide a copy of all test and repair reports to the consumer and to the Town of Boone's Public Utilities Department within ten (10) business days of any completed test or repair work. A tester shall maintain such records for a minimum period of three (3) years.

All certified backflow prevention assembly testers must use the backflow prevention assembly test equipment provided by/approved by the Town of Boone's Public Utilities Department. All test equipment shall be registered with the Town of Boone's Cross Connection Control Department. All test equipment shall be checked for accuracy annually (at a minimum), calibrated, if necessary, and certified to Town of Boone as to such calibration, employing an accuracy/calibration method acceptable to the Town of Boone's Public Utilities Department..

All certified backflow prevention assembly testers must become re-certified every two (2) years through an approved backflow prevention certification program.

Section 9-4. Definitions.

Air-Gap Separation The term "air-gap separation" shall mean a physical separation between the free flowing discharge end of a potable water supply pipeline and an open or non-pressure receiving vessel. An approved air-gap separation shall be at least double the diameter of the supply pipe measured vertically above the overflow rim of the receiving vessel-- in no case less than 1 inch (2.54 cm).

Approved The term "approved", as herein used in reference to a water supply, shall mean a water

supply that has been approved by the North Carolina Department of Environment, Health, and Natural Resources (Division of Health Services). The term "approved," as herein used in reference to air-gap separation, a pressure vacuum breaker, a double check valve assembly, a double check detector assembly, a reduced pressure principle backflow prevention assembly, a reduced pressure principle detector assembly, or other backflow prevention assemblies or methods shall mean approved by the Town of Boone's Public Utilities Department.

Backflow The term "backflow" shall mean the undesirable reversal of flow of water or mixtures of water and other liquids, gases, or other substances into the distribution pipes of the consumer or public potable water system from any source or sources.

Backflow Prevention Assembly-Approved The term "approved backflow prevention assembly" shall mean an assembly used for containment and/or isolation purposes that has been investigated and approved by the Town of Boone's Public Utilities Department, and has been shown to meet the design and performance standards of the American Society of Sanitary Engineers (ASSE), the American Water Works Association (AWWA), or the Foundation for Cross Connection Control and Hydraulic Research of the University of Southern California. The approval of backflow prevention assemblies by the Town of Boone shall be based on a favorable report by the Foundation for Cross Connection Control and Hydraulic Research of the University of Southern California, recommending such an approval. (To be approved, an assembly must be readily accessible for in-line testing and maintenance, and shall successfully complete a one-year field evaluation within the Town of Boone's water system.

Backflow Prevention Device - Approved The term "approved backflow prevention device"shall mean a device used for isolation purposes that has been shown to meet the design and performance standards of the American Society of Sanitary Engineers (ASSE) and the American Water Works Association (AWWA).

Backflow Prevention Assembly - Unapproved The term "unapproved backflow prevention assembly" shall mean an assembly that has been investigated by the Town of Boone's Public Utilities Department, and has been determined to be unacceptable for installation within the Town of Boone's water system. Consideration for disapproval and removal from the Approved List shall be based upon, but not limited to, the following criteria: a) poor performance standards (i.e., significant failure rate); b) lack of or unavailability of repair parts; and/or, c) poor service or response from assembly's factory representative(s)

Backflow Prevention Assembly - Type A "backflow prevention assembly" shall mean an assembly used to prevent backflow into a consumer or public potable water system. The type of assembly used should be based on the degree of hazard either existing or potential (as defined herein). The types are:

a. Double Check Valve Assembly (DCVA)

b. Double Check Detector Assembly (Fire System) (DCDA)

c. Pressure Vacuum Breaker (PVB)

d. Reduced Pressure Principle Assembly (RP)

e. Reduced Pressure Principle-Detector Assembly (Fire System) (RPDA)

Backflow Prevention Assembly Tester-Certified The term "certified backflow prevention assembly tester"shall mean a person who has proven his/her competency to the satisfaction of the Town of Boone Public Utilities Department. Each person who is certified to make competent tests, or to repair, overhaul, and make reports on backflow prevention assemblies shall be knowledgeable of applicable laws, rules, and regulations, shall be a licensed plumber or have at least two (2) years' experience under the supervision of a licensed plumber by the Town of Boone and have qualifications acceptable to the Town of Boone, and must hold a certificate of completion from an approved training program in the testing and repair of backflow prevention assemblies.

Back-Pressure Backflow The term "back-pressure backflow" shall mean any elevation in the consumer water system (by pump, elevation of piping, or steam and/or air pressure) above the supply pressure at the point of delivery which would cause--or tend to cause--a reversal of the normal direction of flow.

Back–Siphonage Backflow The term "back-siphonage backflow" shall mean a reversal of the normal direction of flow in the pipeline due to a negative pressure (vacuum) being created in the supply line with the backflow source subject to atmospheric pressure.

Check Valve - Approved The term "approved check valve" shall mean a check valve that is drip-tight in the normal direction of flow when the inlet pressure is at least one (1) psi and the outlet pressure is zero. The check valve shall permit no leakage in a direction reversed to the normal flow. The closure element (e.g. clapper, poppet, or other design) shall be internally loaded to promote rapid and positive closure. An approved check valve is only one component of an approved backflow prevention assembly--i.e., pressure vacuum breaker, double check valve assembly, double check detector assembly, reduced pressure principle assembly, or reduced pressure detector assembly.

Consumer The term "consumer" shall mean any person, firm, or corporation using or receiving water from the Town of Boone's water system.

Consumer's Water System The term "consumer's water system" shall include any water system commencing at the point of delivery (water meter) and continuing throughout the consumer's plumbing system, located on the consumer's premises, whether supplied by a public potable water or an auxiliary water supply. The system or systems may be either a potable water system or an industrial piping system.

Consumer's Potable Water System The term "consumer's potable water system" shall mean that portion of the privately owned potable water system lying between the point of delivery and point of use and/or isolation protection. This system will include all pipes, conduits, tanks, receptacles, fixtures, equipment, and appurtenances used to produce, convey, store, or use potable water.

Containment The term "containment" shall mean preventing the impairment of the public potable water supply by installing an approved backflow prevention assembly at the service connection.

Contamination The term "contamination" shall mean an impairment of the quality of the water which creates a potential or actual hazard to the public health through the introduction of hazardous or toxic substances or through the spread of disease by sewage, industrial fluids, or waste.

Cross Connection The term "cross connection" shall mean any unprotected actual or potential connection or structural arrangement between a public or a consumer's water system and any other source or system through which it is possible to introduce any contamination or pollution, other than the intended potable water with which the system is supplied. By-pass arrangements, jumper connections, removable sections, swivel or changeover devices, and other temporary or permanent devices through which or because of which backflow can or may occur are considered to be cross connections.

Double Check Valve Assembly The term "double check valve assembly" shall mean an assembly composed of two (2) independently acting, approved check valves, including tightly closing shut-off valves attached at each end of the assembly and fitted with properly located test cocks. This assembly shall only be used to protect against a non-health hazard (i.e., pollutant).

Double Check-Detector Assembly The term "double check-detector assembly" shall mean a specially designed assembly composed of a line-size approved double check valve assembly with a specific bypass water meter and a meter-sized approved double check valve assembly. The meter shall register (in U.S. gallons) accurately for only very low rates of flow and shall show a registration for all rates of flow. This assembly shall only be used to protect against a non-health hazard (i.e., pollutant).

Hazard-Degree Of The term "degree of hazard" shall be derived from the evaluation of conditions within a system which can be classified as either a pollutional (non-health) or a contamination (health hazard).

Hazard-Health The term "health hazard" shall mean an actual or potential threat of contamination of a physical, hazardous or toxic nature to the public or consumer's potable water system to such a degree or intensity that there would be a danger to health.

Hazard - Non-Health The term "non-health hazard" shall mean an actual or potential threat to the quality of the public or the consumer's potable water system. A non-health hazard is one that, if introduced into the public water supply system, could be a nuisance to water customers, but would

not adversely affect human health.

Hazard - Pollutional The term "pollutional hazard" shall mean an actual or potential threat to the quality or the potability of the public or the consumer's potable water system but which would not constitute a health or a system hazard, as defined. The maximum degree or intensity of pollution to which the potable water system could be degraded under this definition would be one that causes a nuisance or is aesthetically objectionable or causes minor damage to the system or its appurtenances.

Health Agency The term "health agency" shall mean the North Carolina Department of Environment, Health, and Natural Resources (Division of Health Services) - NCDEHNR.

Industrial Fluids The term "industrial fluids" shall mean any fluid or solution which may be chemically, biologically, or otherwise contaminated or polluted in a form or concentration such as would constitute a health, or non-health hazard if introduced into a public or consumer potable water system. Such fluids may include, but are not limited to: process waters; chemicals in fluid form; acids and alkalis; oils, gases; etc.

Industrial Piping System – Consumer's The term "consumer's industrial piping system" shall mean any system used by the consumer for transmission of or to confine or store any fluid, solid or gaseous substance other than an approved water supply. Such a system includes all pipes, conduits, tanks, receptacles, fixtures, equipment, and appurtenances used to produce, convey, or store substances which are or may be polluted or contaminated.

Isolation The term "isolation" is the act of confining a localized hazard within a consumer's water system by installing approved backflow prevention assemblies. {Disclaimer: Town of Boone's Public Utilities Department may make recommendations, upon facility inspection, as to the usages of isolation devices/assemblies, but does not assume or have responsibility whatsoever for such installations.}

Point Of Delivery The term "point of delivery" shall generally be at the property line of the customer, adjacent to the public street where the Town of Boone's mains are located, or at a point on the customer's property where the meter is located. The customer shall be responsible for all water piping and control devices located on the customer's side of the point of delivery.

Pollution The term "pollution" shall mean an impairment of the quality of the water to a degree which does not create an actual hazard to the public health but which does adversely and unreasonably affect the aesthetic qualities of such waters for domestic use.

Potable Water The term "potable water" shall mean water from any source which has been investigated by the North Carolina Department of Environment, Health, and Natural Resources (Division of Health Services) and which has been approved for human consumption.

Public Potable Water System The term "public potable water system" shall mean any publicly or

privately owned water system operated as a public utility, under a current North Carolina Department of Environment, Health, and Natural Resources permit, to supply water for public consumption or use. This system will include all sources, facilities, and appurtenances between the source and the point of delivery such as valves, pumps, pipes, conduits, tanks, receptacles, fixtures, equipment, and appurtenances used to produce, convey, treat, or store a potable water for public consumption or use.

Reduced Pressure Principle Backflow Prevention Assembly The term "reduced pressure principle backflow prevention assembly" shall mean an assembly containing within its structure a minimum of two (2) independently acting, approved check valves, together with a hydraulically operating, mechanically independent, pressure differential relief valve located between the check valves and at the same time below the first check valve. The first check valve reduces the supply pressure a predetermined amount so that during normal flow and at cessation of normal flow, the pressure between the checks shall be less than the supply pressure. In case of leakage of either check valve, the pressure differential relief valve, by discharge to atmosphere, shall operate to maintain the pressure between the checks less than the supply pressure. The unit shall include tightly closing shut-off valves located at each end of the assembly and each assembly shall be fitted with properly located test cocks. The assembly is designed to protect against a health hazard (i.e., contaminant).

Reduced Pressure Principle-Detector Assembly The term "reduced pressure principle-detector assembly" shall mean a specially designed assembly composed of a line-size approved reduced pressure principle backflow prevention assembly with a specific bypass water meter and a meter-sized approved reduced pressure principle backflow prevention assembly. The meter shall register (in U.S. gallons) accurately for only very low rates of flow and shall show a registration for all rates of flow. This assembly shall be used to protect against health hazard (i.e., contaminant).

Service Connections The term "service connection" shall mean the terminal end of a service connection from the public potable water system, i.e., where the Town of Boone loses jurisdiction and sanitary control over the water at its point of delivery to the consumer's water system.

Vacuum Breaker - Atmospheric Type The term "atmospheric vacuum breaker" shall mean the terminal end of a service connection from the public potable water system, i.e., where the Town of Boone loses jurisdiction and sanitary control over the water at its point of delivery to the consumer's water system.

Vacuum Breaker Pressure Type The term "pressure vacuum breaker" shall mean an assembly containing an independently operating internally loaded check valve and an independently operating loaded air inlet valve located on the discharge side of the check valve. The assembly must be equipped with properly located test cocks and tightly closing shut-off valves attached at each end of the assembly. This assembly is designed to protect against a health hazard (i.e., contaminant) under a back–siphonage condition only.

Water Purveyor The term "water purveyor" shall mean the owner or operator of a public potable water system, providing an approved water supply to the public.

Water Supply Approved The term "approved water supply", shall mean any public potable water supply which has been investigated and approved by the North Carolina Department of Environment, Health and Natural Resources. The system must be operating under a valid health permit. In determining what constitutes an approved water supply, the North Carolina Division of Health Services shall have the final judgment as to its safety and potability.

Water Supply Auxiliary The term "auxiliary water supply" shall mean any water supply on or available to the premises other that the purveyor's approved public potable water supply. These auxiliary water supplies may include water from another purveyor's public water supply or any natural source such as well, spring, river, stream, etc., used water, or industrial fluids. These waters may be polluted, contaminated, or objectionable and constitute an unacceptable water source over which the water purveyor does not have sanitary control.

Water Supply - Unapproved The term "unapproved water supply" shall mean a water supply which has not been approved for human consumption by the North Carolina Department of Environment, Health, and Natural Resources.

Water - Used The term "used water" shall mean any water supplied by a water purveyor from a public water system to a consumer's water system after it has passed through the point of delivery and is no longer under the control of the water purveyor.

Section 9-5. Right of Entry.

Authorized representative(s) from the Town of Boone shall have the right to enter, upon presentation of proper credentials and identification, any building, structure, or premises during normal business hours, or at any time during the event of an emergency, to perform any duty imposed by this Ordinance. Those duties may include sampling and testing of water, or inspections and observations of all piping systems connected to the public water supply. Where a user has security measures in force which would require proper identification and clearance before entry into his premises, the user shall make necessary arrangements with the security guards so that upon presentation of suitable identification, Town of Boone's Public Utilities Department personnel will be permitted to enter, without delay, for the purposes of performing their specific responsibilities. Refusal to allow entry for these purposes may result in discontinuance of water service.

On request, the consumer shall furnish to the Town of Boone any pertinent information regarding the water supply system on such property where cross connections and backflow are deemed possible.

Section 9-6. Elimination of Cross Connections: Degree of Hazard.

When cross connections are found to exist, the owner, his agent, occupant, or tenant will be notified

in writing to disconnect the same within the time limit established by the Town of Boone's Public Utilities Department. The degree of protection required and maximum time allowed for compliance will be based upon the potential degree of hazard to the public water supply system. The maximum time limits are as follows:

a. Cross connections with private wells or other auxiliary water supplies--immediate disconnection.

b. All facilities which pose a health hazard to the potable water system must have a containment assembly in the form of a reduced pressure principle backflow prevention assembly within 60 days.

c. All industrial and commercial facilities not identified as a health hazard shall be considered non-health hazard facilities. All non-health hazard facilities must install, as a minimum containment assembly, a double check valve assembly within 90 days.

d. If, in the judgment of the Town of Boone's Public Utilities Department, an imminent health hazard exists, water service to the building or premises where a cross connection exists may be terminated unless an air gap is immediately provided, or the cross connection is immediately eliminated.

e. Based upon recommendation from the Town of Boone, the consumer is responsible for installing sufficient internal isolation backflow prevention assemblies and/or methods (i.e., air gap, pressure vacuum breakers, reduced pressure principle backflow prevention assembly, double check valve assembly).

f. Water mains served by **APPALACHIAN STATE UNIVERSITY**, but not maintained by the Town of Boone, should be considered cross connections, with degree of hazard to be determined by Town of Boone's Public Utilities Department; the degree of protection shall be based upon the degree of hazard, as determined by the Town of Boone's Public Utilities Department.

g. In the event that a Town of Boone Cross Connection Control Inspector does not have sufficient access to every portion of a private water system (i.e., classified research and development facilities; federal government property) to allow a complete evaluation of the degree of hazard associated with such private water systems, an approved reduced pressure principle assembly shall be required as a minimum of protection.

h. No person shall fill special- use tanks or tankers containing pesticides, fertilizers, other toxic chemicals or their residues from the public water system except at a location equipped with an air gap or an approved reduced pressure principle backflow prevention assembly properly installed on the public water supply.

Section 9-7. Installation of Assembilies.

1. All backflow prevention assemblies shall be installed in accordance with the specifications furnished by the Town of Boone's Public Utilities Department, and/or the manufacturer's installation instructions and/or in the latest edition of the North Carolina Building Code then in existence.

2. All new construction plans and specifications, when required by the North Carolina Building Code and the North Carolina Division of Health Services (NCDEHNR), shall be made available to the Town of Boone for review and approval and to determine the degree of hazard.

3. Ownership, testing, and maintenance of the assembly shall be the responsibility of the customer.

4. All double check valve assemblies must be installed in drainable pits wherever below-ground installation is necessary, in accordance with detailed specifications provided by the Town of Boone's Public Utilities Department.

5. Reduced pressure principle assemblies must be installed in a horizontal position and in a location in which no portion of the assembly can become submerged in any substance under any circumstances (pit and/or below grade installations are prohibited). Double check valve assemblies may be installed in a vertical position with prior approval from the Town of Boone's Cross Connection Control Department, provided the flow of water is in an upward direction.

6. The installation of a backflow prevention assembly which is not approved must be replaced with an approved backflow prevention assembly.

7. The installer is responsible to make sure a backflow prevention assembly is working properly upon installation and is required to furnish the following information to the Town of Boone's Cross Connection Control Program Department within fifteen (15) days after a reduced pressure principle backflow preventer (RP), double check-detector assembly (DCDA), pressure vacuum breaker (PVB), double check-detector assembly (DCDA), or reduced pressure principle detector assembly (RPDA) is installed:

   a. Service address where assembly is located

   b. Owner (and address, if different from service address)

   c. Description of assembly's location

   d. Date of installation

   e. Installer's name, plumbing company represented, plumber's license number and

project permit number

f. Type of assembly, size of assembly

g. Manufacturer, model number, serial number

h. Test results/reports

8. When it is not possible to interrupt water service, provisions shall be made for a parallel installation of backflow prevention assemblies. The Town of Boone's Public Utilities Department will not accept an unprotected bypass around a backflow preventer when the assembly is in need of testing, repair, or replacement.

9. The Town of Boone shall, upon notification, install the appropriate containment assembly not to exceed the following time frame:

   Health Hazard.....60 days
   Non-Health Hazard.....90 days

10. Following installation, all RP, DCVA, PVB, DCDA, and RPDA are required to be tested by a certified backflow prevention assembly tester within ten (10) days.

Section 9-8. Testing and Repair of Assemblies.

1. Testing of backflow prevention assemblies shall be made by a certified backflow prevention assembly tester or may be contracted out to the Town of Boone's Cross Connection Control Department at the customer's expense. Such tests are to be conducted upon installation and annually thereafter or at a frequency established by Town of Boone's Public Utilities Department. A record of all testing and repairs is to be retained by the customer. Copies of the records must be provided to the Town of Boone's Public Utilities Cross Connection Control Department within ten (10) business days after the completion of any testing and/or repair work.

2. Any time that repairs to backflow prevention assemblies are deemed necessary, whether through annual or required testing or routine inspection by the owner or by the Town of Boone's Public Utilities Department, these repairs must be completed within a specified time in accordance with the degree of hazard. In no case shall this time period exceed:

   a. Health Hazard Facilities - 14 days
   b. Non-Health Hazard Facilities - 21 days

3. All backflow prevention assemblies with test cocks are required to be tested annually or at

frequency established by Town of Boone's Department of Public Utilities. Testing requires a water shutdown usually lasting five (5) to twenty (20) minutes. For facilities that require an uninterrupted supply of water, and when it is not possible to provide water service from two separate meters, provisions shall be made for a parallel installation of backflow prevention assemblies.

4. All certified backflow prevention assembly testers must utilize the backflow prevention assembly test equipment which has been provided/approved by the Town of Boone's Public Utilities Department. All test equipment shall be registered with the Town of Boone's Cross Connection Control Department. All test equipment shall be checked for accuracy annually (at a minimum), calibrated, if necessary, and certified to the Town of Boone as to such accuracy/calibration, employing a calibration method acceptable to the Town of Boone (See Section 9-3).

5. It shall be unlawful for any customer or certified tester to submit any record to the Town of Boone which is false or incomplete in any material respect. It shall be unlawful for any customer or certified tester to fail to submit to the Town of Boone any record which is required by this Ordinance. Such violations may result in any of the enforcement actions outlined in Section 9-12 of this Ordinance.

Section 9-9. Facilities Requiring Protection.

Approved backflow prevention assemblies shall be installed on the service line to any premises that the Town of Boone has identified as having a potential for backflow.

The following types of facilities or services have been identified by the Town of Boone as having a potential for backflow of non-potable water into the public water supply system. Therefore, an approved backflow prevention assembly will be required on all such services according to the degree of hazard present. Other types of facilities or services not listed below may also be required to install approved backflow prevention assemblies if determined necessary by the Town of Boone. As a minimum requirement, all commercial services will be required to install a Double Check Valve Assembly, unless otherwise listed below.

DCVA = Double Check Valve Assembly
RP= Reduced Pressure Principle Assembly
DCDA = Double Check Detector Assembly
RPDA = Reduced Pressure Detector Assembly
AG = Air Gap
PVB = Pressure Vacuum Breaker

1. Automotive Services Stations, Dealerships, etc.
    a. No Health Hazard: DCVA
    b. Health Hazard: RP

2. Automotive Plants: RP

3. Auxiliary Water Systems:
    a. Approved Public/Private Water Supply: DCVA
    b. Unapproved Public/Private Water Supply: AG
    c. Used Water and Industrial Fluids: RP

4. Bakeries:
    a. No Health Hazard: DCVA
    b. Health Hazard: RP

5. Beauty Shops/Barber Shops
    a. No Health Hazard: DCVA
    b. Health Hazard: RP

6. Beverage Bottling Plants: RP

7. Breweries: RP

8. Buildings - Hotels, apartment houses, public and private buildings, or other structures having unprotected cross connections.
    a. (Under five stories) No Health Hazard: DCVA
    b. (Under five stories) Health Hazard: RP c. (Over five stories) All: RP

9. Canneries, packing houses, and rendering plants: RP

10. Chemical plants - Manufacturing, processing, compounding or treatment: RP

11. Chemically contaminated water systems: RP

12. Commercial car-wash facilities: RP

13. Commercial greenhouses: RP

14. Commercial sales establishments (department stores, malls, etc.)
    a. No Health Hazard: DCVA
    b. Health Hazard: RP

15. Concrete/asphalt plants: RP

16. Dairies and cold storage plants: RP

17. Dye works: RP

18. Film laboratories: RP

19. Fire systems
    Systems ¾. (inch) to 2. (inch)
        a. No Health Hazard: DCDA
        b. Health Hazard (Booster Pumps, Foam, Antifreeze Solution, etc.) RPDA

    Systems 2 ½. (inch) to 10. (inch) (or larger)
        a. No Health Hazard: DCDA
        b. Health Hazard (Booster Pumps, Foam, Antifreeze Solution, etc) RPDA

20. Hospitals, medical buildings, sanitariums, morgues, mortuaries, autopsy facilities, nursing and convalescent homes, medical clinics, and veterinary hospitals: RP

21. Industrial facilities:
        a. No Health Hazard: DCVA
        b. Health Hazard: RP

22. Laundries:
        a. No Health Hazard: DCVA
        b. Health Hazard: (i.e., Dry Cleaners): RP

23. Lawn irrigation systems (split taps):
        a. No Health Hazard: DCVA
        b. Health Hazard: (Booster Pumps, Chemical Systems): RP

24. Metal manufacturing, cleaning, processing, and fabricating plants: RP

25. Mobile home parks:
        a. No Health Hazard: DCVA
        b. Health Hazard: RP

26. Oil and gas production, storage or transmission properties: RP

27. Paper and paper products plants: RP

28. Pest control (exterminating and fumigation): RP

29. Plating Plant: RP

30. Power Plants: RP

31. Radioactive materials or substances, plants, or facilities handling: RP

32. Restaurants
    a. No Health Hazard: DCDA
    b. Health Hazard: RP

33. Restricted, classified, or other closed facilities: RP

34. Rubber plants (natural or synthetic): RP

35. Sand and gravel plants: RP

36. Schools and colleges: RP

37. Sewage and storm drain facilities: RP

38. Swimming Pools: RP

39. Waterfront facilities and industries: RP

All assemblies and installations shall be subject to inspection and approval by the Town of Boone's Public Utilities Department.

Section 9-10. Connections with Unapproved Sources of Supply.

1. No person shall connect or cause to be connected any supply of water not approved by the North Carolina Department of Environment, Heath, and Natural Resources to the water system supplied by the Town of Boone. Any connections allowed by the Town of Boone must be in conformance with the backflow prevention requirements of the Ordinance.

2. In the event of contamination or pollution of a public or consumer potable water system, the consumer shall notify the Town of Boone and the Town of Boone's Public Utilities Department immediately in order that appropriate measures may be taken to overcome and eliminate the contamination or pollution.

Section 9-11. Fire Protection Systems.

1. All connections for fire protection systems connected with the public water system, two (2) inches and smaller, shall be protected with an approved double check valve assembly as a minimum requirement. All fire systems using toxic additives or booster pumps shall be protected by an approved reduced pressure principle assembly at the main service connection.

2. All connections for fire protection systems connected with the public water system greater than two (2) inches shall be protected with an approved double check detector assembly

as a minimum requirement. All fire protection systems using toxic or hazardous additives or booster pumps shall be protected by an approved reduced pressure principle detector assembly at the main service connection.

3. All existing backflow prevention assemblies two and one-half (2 ½) inches and larger installed on fire protection systems (that were initially approved by the Town of Boone's Public Utilities Department) shall be allowed to remain on the premises, as long as they are being properly maintained, tested and repaired as required by this Ordinance. If, however, the existing assembly must be replaced (once it can no longer be repaired), or in the event of proven water theft through an unmetered source, the consumer shall be required to install an approved double check detector assembly or reduced pressure principle detector assembly as required by this provision.

Section 9-12. Enforcement.

1. The owner, manager, supervisor, and person in charge of any installation found not to be in compliance with the provisions of this Ordinance shall be notified in writing with regard to the corrective action(s) to be taken. The time for compliance shall be in accordance with Section 9-6.

2. The owner, manager, supervisor, and person in charge of any installation which remains in non-compliance after the time prescribed in the initial notification, as outlined in Section 9-6 shall be considered in violation of this Ordinance, and may be issued a civil citation by the Town of Boone. Said citation shall specify the nature of the violation and the provision(s) of this Ordinance violated, and further notify the offender that the civil penalty for said violation is as set forth in paragraph (3) below and is to be paid to the Town of Boone at the office of the Public Utilities Department, 321 E. King Street Boone, North Carolina, within thirty (30) days. If the penalty prescribed herein is not paid within the time allowed, the Town of Boone may initiate a civil action in the nature of a debt and recover the sums set forth in paragraph (3) below plus the cost of the action and attorney's fees.

3. Any offender who shall continue any violation beyond the time limit provided for in the aforementioned notification shall be subject to a civil penalty of up to $1000.00 per violation. Each day in which a violation of any provision of this Ordinance shall occur or continue shall constitute a separate and distinct offense.

4. If, in the judgment of Town of Boone, any owner, manager, supervisor, and person in charge of any installation is found to be in non-compliance with the provisions of this Ordinance, or neglects his responsibility to correct any violation, the Town of Boone may discontinue water service until compliance is achieved.

5. Failure of a certified tester to submit any record required by this Ordinance, or the submission of falsified reports/records may result in a civil penalty of up to $1000.00

per violation. If a certified backflow prevention assembly tester submits falsified records to Town of Boone, the Town of Boone may take the necessary actions to revoke certification to test backflow prevention assemblies within the potable water system for a time period not to exceed one (1) year. The tester will then be required to complete an approved certification course to acquire a new certification. Falsification made to records/reports after becoming re-certified shall result in the permanent revocation of backflow testing certification, in addition to a civil penalty of $1,000.00 per violation.

6. Enforcement of this program shall be administered by the Manager of the Town of Boone or his authorized representative.

Section 9-13. Adoption.

This Ordinance amendment shall be in full force and effective this the 26th day of June, 2003.

ARTICLE X
GREASE PREVENTION PROGRAM STANDARDS

Section 10-1. Purpose.
This section of the Town of Boone Water and Sewer Use Ordinance sets forth uniform requirements for contributors into the wastewater collection and treatment system for the Town of Boone, hereafter referred to as the Town, and enables the Town to comply with all applicable State and Federal laws, including the Clean Water Act (33 United States Code 1251 *et seq.*), the state-issued Collection System Permit and more completely describes how Users shall meet the requirements in Section 8-9B3 of the Town of Boone Water and Sewer Use Ordinance.

Section 10-2. Definitions.
For the purpose of this article, the following terms and phrases shall have the meanings designated below:

A. **Abbreviations:** The following abbreviations, when used in this article, shall have the designated meanings:

1. BMPs - Best Management Practices
2. CFR - Code of Federal Regulations
3. FSE - Food Service Establishment
4. gpd - gallons per day
5. GPP -Grease Prevention Program
6. HRT -hydraulic retention time
7. mg/L - milligrams per liter
8. PDI - Plumbing and Drainage Institute
9. PUD - Public Utilities Department
10. POTW - Publicly Owned Treatment Works (includes collection system)
11. SUO - Sewer Use Ordinance
12. WWTP - Wastewater Treatment Plant

B. **Accessible:** Accessible shall mean direct access to each compartment of the interceptor/trap without the necessity of removing any panel, door, vehicle, equipment, materials, or other similar obstructions that are not a part of the interceptor/trap.

C. **Best Management Practices (BMP):** The measures or practices used to reduce the amount of pollution entering the sanitary sewer system, surface water, air, land or groundwaters.

D. **Certification Statement:** All User reports must be signed by an authorized representative (as defined in Article VIII) of the User of the sanitary sewer system and contain the following certification statement:

"I certify under penalty of law that this document and all attachments were prepared under my direction or supervision in accordance with a system designed to assure that qualified personnel

properly gather and evaluate the information submitted. Based on my inquiry of the person or persons who manage the system, or those persons directly responsible for gathering the information, the information submitted is, to the best of my knowledge and belief, true, accurate and complete. I am aware that there are significant penalties for submitting false information, including the possibility of fine and imprisonment for knowing violations."

E. **Floatable Oil:** Oil, fat or grease in a physical state such that it will separate by gravity from wastewater by treatment in a pretreatment device approved by the Town.

F. **Food Service Establishment (FSE):** A facility engaged in the preparation and/or packaging of food and/or beverage for sale and/or consumption. Food service establishments shall include, but not be limited to: food manufacturers, food packagers, restaurants, cafes, bars, bakeries, grocery stores, and kitchens in hotels, lounges, hospitals, nursing homes, and schools.

G. **Grease Waste:** All contents of the grease interceptor/traps at food service establishments, including accumulated floatable oil, whether emulsified or not, whether solidified or viscous, solids, water and trash.

H. **Grease Waste Hauler:** A business which is licensed to collect and transport grease waste to an approved facility. A grease waste hauler may also provide other services to a facility related to grease interceptor/trap maintenance.

I. **Interceptor:** A containment box designed to passively remove and retain grease waste from kitchen wastewater prior to discharge into the sanitary sewer system. It is usually installed outside.

J. **Local Code Official:** Town of Boone Development Services Inspector responsible for approving building permits.

K. **Pretreatment Section:** The section in the Town of Boone responsible for the control of pollutants introduced into the POTW from non-domestic sources. The section was developed by the Town of Boone in compliance with federal regulation 40 CFR 403.8 and approved by the Approval Authority in accordance with 40 CFR 403.11.

L. **Publicly Owned Treatment Works (POTW):** A treatment works, as defined by Section 212 of the Clean Water Act. POTW is owned in this instance by the Town of Boone. This definition includes any devices or systems used in the collection, storage, treatment, recycling and reclamation of municipal sewage or industrial wastes of a liquid nature. It also includes sewer, pipes, and other conveyances only if they convey water to the POTW treatment plant.

M. **POTW Director:** Town of Boone Director of Public Utilities and Engineering Department or an authorized deputy, representative or agent of the POTW Director.

N. **Shall is mandatory; May is permissive.**

O. **Trap:** A containment box designed to actively remove and retain grease waste from kitchen wastewater prior to discharge into the sanitary sewer system. It is usually installed inside.

P. **Waste Manifest Form:** A form issued by the Town of Boone Public Utilities Department to document the transfer of waste. Copies of the completed forms shall be made and submitted to the Pretreatment Section.

Section 10-3. Grease Prevention Program.

A. Education.

An education program employed by the Town will be used to encourage proper grease disposal practices by all Users of the POTW.

B. Interceptor/Trap Inspection Program for Food Service Establishments (FSE)

1. INSTALLATION.

a. FSE shall install grease interceptor/trap(s), at FSE expense, as required by the Director of Public Utilities. All new grease interceptor/traps shall be of the size, design, and location individually approved in writing prior to installation by the POTW Director and the local code official. FSE shall submit the following information to the Town of Boone for approval:

1. A diagram showing the proposed location of the interceptor/trap in relation to the building and the Sewer Collection System with connections.

2. The number and type of fixtures proposed attached and their flow rating.

3. The proposed size of the interceptor/trap, the calculations used to determine the size, the minimum retention time and grease waste storage volume of the unit.

4. Detailed drawing of the unit showing any internal structures including sizes and dimensions of the internal structures and piping and sufficient detail for the POTW Director and the local code official to determine if the unit meets the construction requirements.

b. FSE shall hire an interceptor/trap manufacturer, commercial plumber or engineer to determine the correct size, design and location for the grease interceptor/trap and then submit the information for approval as described above.

c. The hired manufacturer, commercial plumber or engineer should size interceptors for a 30 minute HRT and traps for the proper flow rating. The POTW Director will not advise any FSE about the specific installation or sizing of the grease interceptor/trap, except to approve or disapprove the submitted information.

d. FSE shall install only the size interceptor/trap that is recommended by the hired manufacturer, commercial plumber or engineer and approved by the POTW Director and the local code official.

e. Traps shall be sized in accordance with the standards in the International Plumbing Code and are limited to one appliance per trap. Automatic dishwashers shall not be connected to traps. Flow control devices and solids traps shall be required prior to traps.

f. The maximum size for an interceptor/trap shall be 2000 gallons. If the calculated minimum size is larger than this, two or more interceptors of approximately equal size shall be installed in series.

g. Grease interceptor/trap selection and installation shall be done according to all applicable laws and building codes, even where not indicated in this document.

h. Grease interceptor/trap installation and operation shall be done according to all manufacturer's instructions, unless more stringent instructions are given by the POTW Director.

i. All compartments of grease interceptor/traps shall be readily and easily accessible for FSE maintenance requirements and Town inspection.

j. All grease laden sources (e.g. kitchen area floor drains, can wash, kitchen hand wash sinks, multi-compartment sinks, pre-rinse sink of the automatic dishwasher, automatic dishwasher, pulpers, etc.) shall be connected to sewer lines intended for grease interceptor/trap service.

k. Food grinders shall be connected to grease interceptor/traps and the interceptor/trap size shall be increased by 30% to accommodate the high solid waste stream. It is strongly recommended that food grinder use be discontinued and the food grinder removed as it increases the FSE cost of installation and maintenance.

l. In the case where interceptor/trap installation occurred before this document was approved by Town of Boone and the interceptor/trap does not meet the standards of this document, the FSE shall upgrade its interceptor/trap, when the POTW Director determines it is necessary.

2. MAINTENANCE.

a. FSE shall ensure that interceptor(s) are pumped out by a grease waste hauler, removing all water, floatable oil, settled solids and any other visible signs of grease anywhere within the grease interceptor, at a frequency adequate for the proper function of the interceptor and **at a minimum of every three (3) months**. Any other pumping schedule that is less frequent shall be subject to written approval by the POTW Director.

b. Grease interceptor shall be cleaned whenever the combined thickness of the floating greases and settled solids is equal to or greater than 25% of the total liquid depth in the interceptor to ensure proper function.

c. The cleaning frequency of a grease trap shall be adequate for the proper function of the trap and **at a minimum of every one (1) month.** Any other pumping schedule that is less frequent shall be subject to written approval by the POTW Director. The trap must have surface grease and oil removed, settled solids removed, all sides scraped, removable parts removed and cleaned, be inspected for damage and corrosion, and be properly reassembled.

   1. If a grease waste hauler pumps the trap, then all contents must be removed as described in letters a-j, except that it must be done at the frequency indicated in letter c.

   2. When cleaned by FSE personnel, water in trap may remain in the unit. FSE shall be responsible for appropriate disposal of the removed substances. Grease waste shall not be reintroduced to the sewer collection system.

d. Grease trap shall be cleaned whenever the combined thickness of the floating greases and settled solids is equal to or greater than the PDI-certified value to ensure proper function.

e. No FSE shall allow a grease waste hauler to skim the waste in an interceptor/trap. Both sides of the interceptor/trap shall be cleaned to the bottom at all times as indicated above. Washdown water shall be pumped out as well.

f. Reintroduction of wastewater (eg decanting) removed from a grease interceptor/trap is prohibited, whether it has been treated by the grease waste hauler or not.

g. Grease interceptor/traps may be refilled to just above the bottom of the outlet down spout or baffle with tap water before being put back into operation, if desired or required.

h. It is recommended that the FSE be witness to interceptor/trap cleaning.

i. FSEs shall not use any chemical and/or biological product to remove grease from the interceptor/trap. (These products move grease into the sewer collection system and

defeat the purpose of having interceptor/traps in the first place.)

j. All needed repairs shall be completed within 30 days of discovery, unless otherwise instructed by the Town of Boone.

3. RECORDS AND REPORTS.

a. The Grease Prevention Program (GPP) document, provided by the Town of Boone, shall be kept on-site for reference for the duration of the operation of the FSE at the present site. The FSE shall make this document available upon request by the POTW Director.

b. Grease Interceptor/Trap Certification Form is provided in the GPP document. The completed form must be submitted to the address below.

c. A Waste Manifest Form is provided in the GPP document. Copies of this blank form shall be made by the facility and kept on hand. It shall be the responsibility of the FSE to maintain an adequate supply of blank Waste Manifest Forms. This form shall be completed and signed by a representative of the FSE for each waste load. The grease waste hauler's receipt shall be attached to the Waste Manifest Form. It shall be the responsibility of the FSE to ensure that the entire Waste Manifest Form is complete and accurate. When FSE personnel remove the grease waste, the name and signature of the employee shall be written in the appropriate grease waste hauler lines.

d. FSE shall retain, on site, each completed Waste Manifest Form and receipts from the grease waste hauler for a period of three (3) years from the date the waste was removed from the FSE's site. Upon request by the POTW Director, the FSE shall make any and all original copies of the Waste Manifest Forms and receipts from grease waste hauler available for review.

e. FSE shall submit a copy of the completed Waste Manifest Form and receipt from the grease waste hauler each time the interceptor/trap is cleaned. FSE that clean their own trap(s) shall submit a copy of the completed Waste Manifest Form(s) and the maintenance sheet(s) used by FSE staff each month. These reports are due by the 30th day of the month that follows the month in which the interceptor/trap was cleaned.

f. FSE wishing to obtain or maintain a waiver from the GPP must request and submit an application for the waiver annually by January 30. Waivers are given to FSE that cannot contribute grease waste to the sewer due to FSE operations. Waivers are given to FSE that are exempt from health department regulations (NCGS 130A-247-250), unless the FSE has a deep fryer, or is causing grease waste to accumulate in the

sewer.

g. All reports required by the Town of Boone shall be submitted to the Town at the following address:

Town of Boone - WWTP
Pretreatment Section
P.O. Box 192
Boone, N.C. 28607

All reports will be deemed to have been submitted on the date postmarked.

4. INSPECTION.

The FSE shall provide access to all compartments of the grease interceptor/trap for inspection by an authorized representative from the Town of Boone. The inspection may include the interior and exterior structure of the interceptor/trap, the waste sources and types that are plumbed to the interceptor/trap and the waste levels inside the interceptor/trap. Any corrective actions indicated by the inspector shall be enforceable.

5. FEES.

An annual program fee will be assessed and is due in July of each year. The annual program fee will be waived for each FSE that received zero violations during the previous calendar year. The amount of this fee will be listed on the Schedule of Charges and Fees.

6. ENFORCEMENT RESPONSE PLAN.

The enforcement response plan will go into effect after one year of FSE orientation. The year begins at receipt of GPP document. During the first year, enforcement will consist of only educational materials and increased frequency of inspection. The enforcement response plan follows on the next page.

APPENDIX A

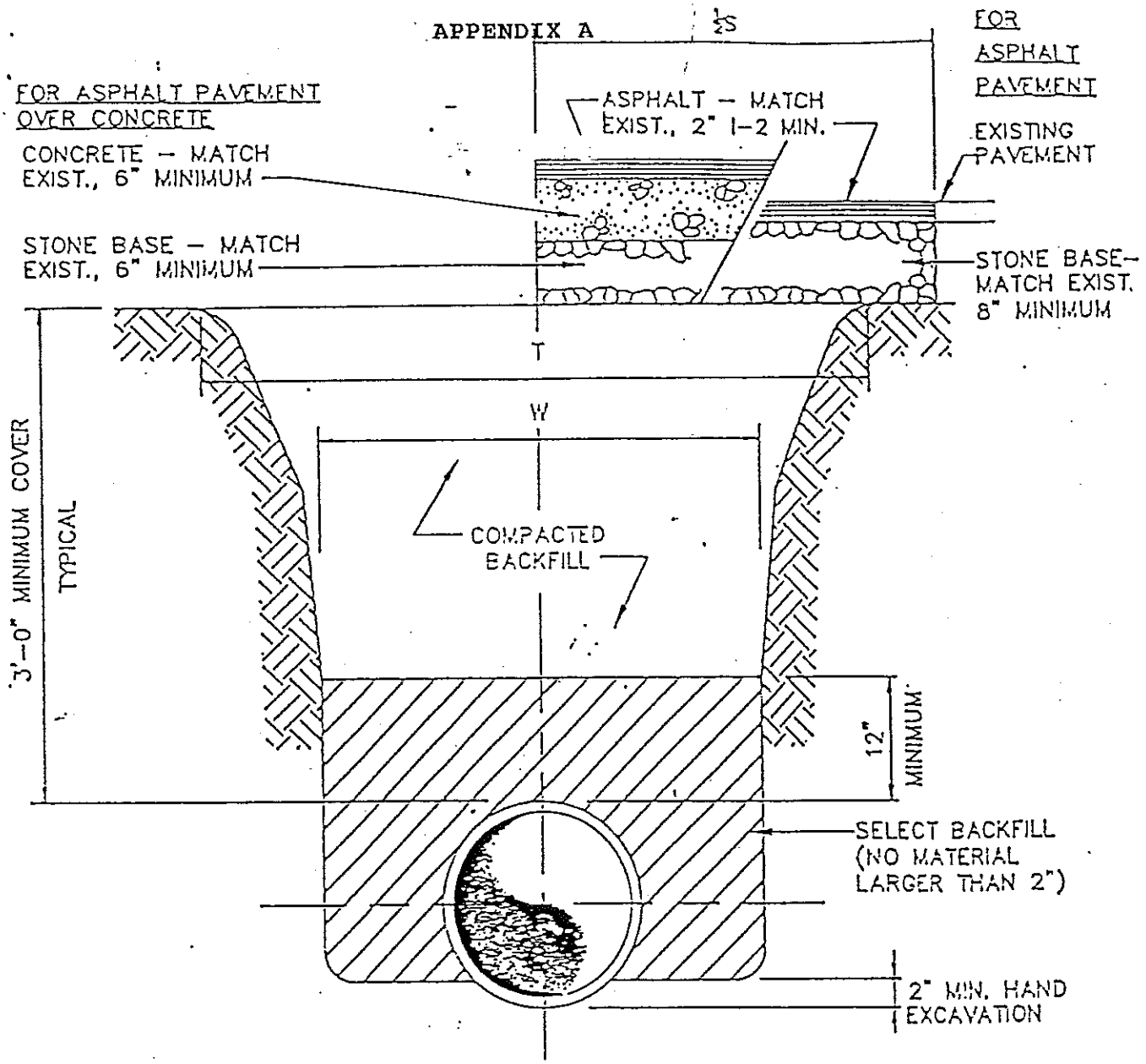

NOTES:

1. HAND EXCAVATE TO CONFORM TO PIPE BARREL

2. TRENCH SIDE SLOPES SHALL BE IN ACCORDANCE WITH OSHA REQUIREMENTS. BEGIN SIDE SLOPE, IF USED, APPROX. 18" ABOVE TOP OF PIPE. (TYPICAL ALL BEDDING TYPES)

3. SEE STD NPW-2 FOR DIMENSIONS

4. EXCAVATE AT PIPE BELLS SO BELL DOES NOT SUPPORT PIPE.

TOWN OF BOONE, N.C. STANDARD DETAIL	DATE: JULY, 1989
PIPELINE INSTALLATION TRENCH DETAIL	NOT TO SCALE
	STANDARD TOB -1

TRENCH EXCAVATION LIMITS		
INTERNAL DIAMETER OF PIPE	W WIDTH OF TRENCH	
	MAX.	MIN.
4"–6"	NO LIMIT	2'–0"
8"–10"	NO LIMIT	2'–2"
12"	3'–9"	O.D.+2'
14"–16"	4'–2"	O.D.+2'
18"	4'–4"	O.D.+2'
20"	4'–8"	O.D.+2'
24"	4'–11"	O.D.+2'
30"	5'–6"	O.D.+2'
36"	6'–0"	O.D.+2'

W = TRENCH WIDTH AT TOP OF PIPE

T = WIDTH AT TOP OF TRENCH

S = PAVEMENT REPLACEMENT WIDTH (S = T + 3'–0")

TOWN OF BOONE, N.C. STANDARD DETAIL	DATE: JULY 1989
PIPELINE INSTALLATION TRENCH EXCAVATION LIMITS	NOT TO SCALE
	STANDARD TOB-2

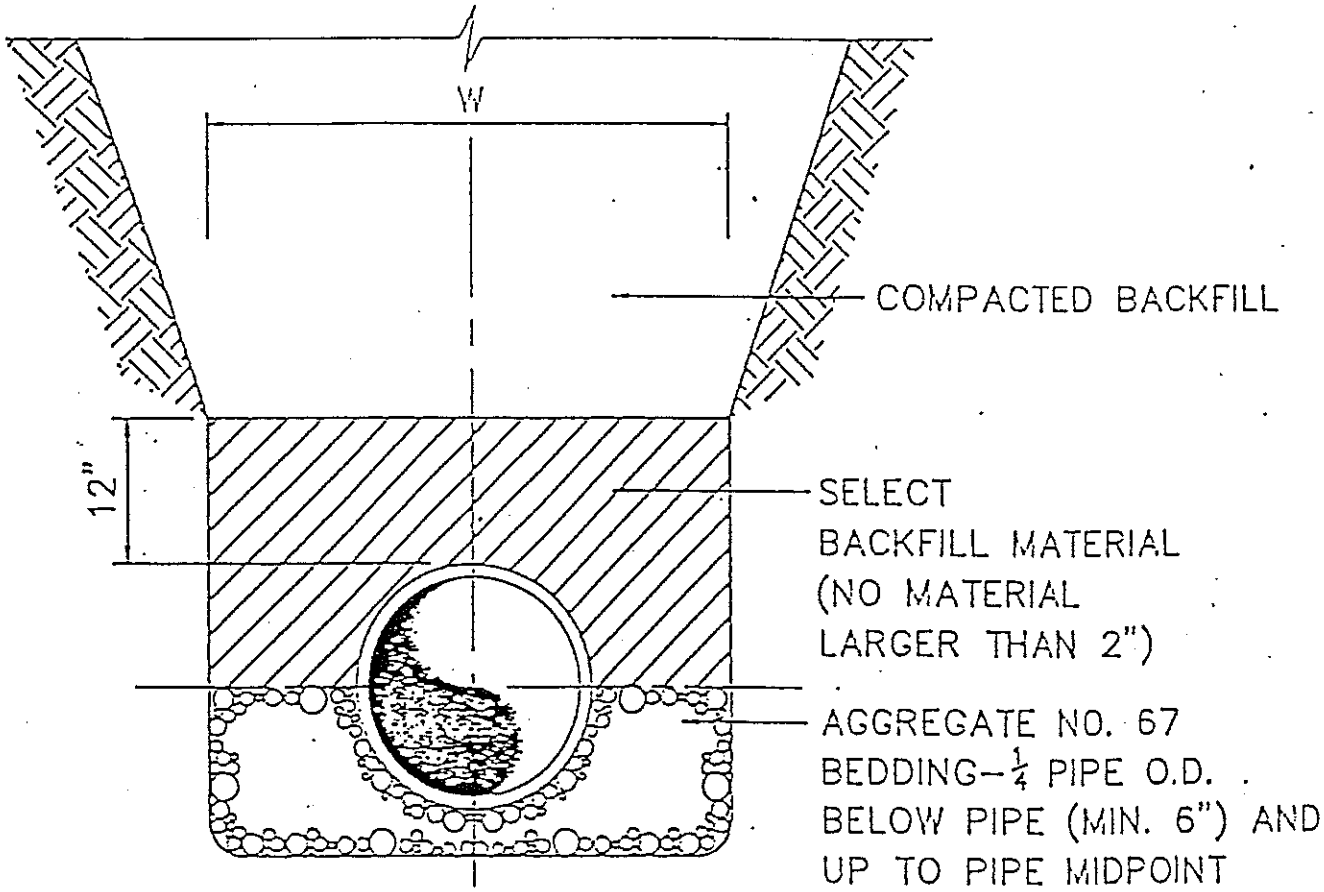

"TYPE II"

NOTE:
SEE STANDARD NPW–2
FOR DIMENSION "W"

TOWN OF BOONE, N.C. STANDARD DETAIL	DATE: JULY 1989
PIPELINE INSTALLATION TYPE II BEDDING	NOT TO SCALE STANDARD TOB -3

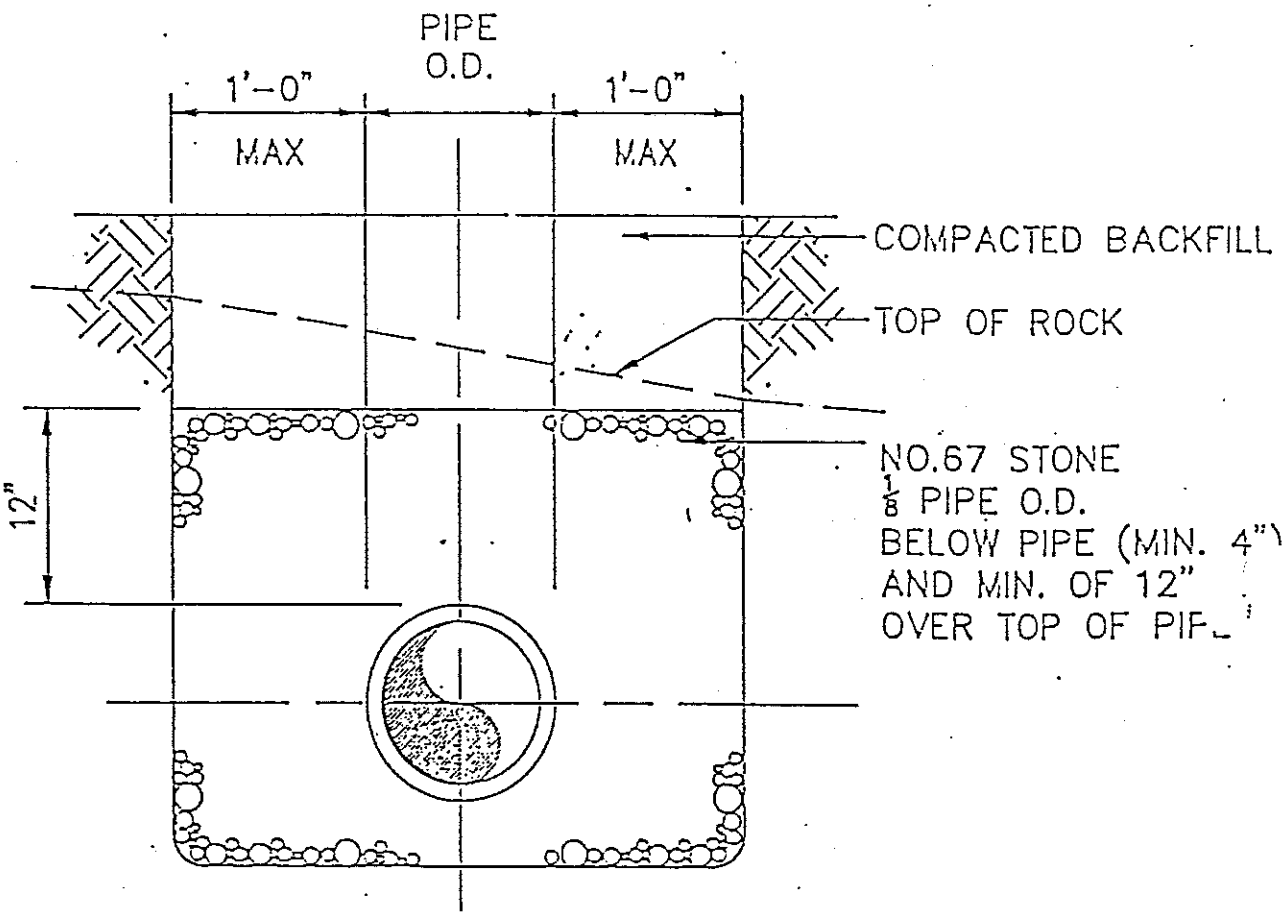

"TYPE III"

TOWN OF BOONE, N.C. STANDARD DETAIL	DATE: JULY, 1989
PIPELINE INSTALLATION IN ROCK (TYPE III)	NOT TO SCALE
	STANDARD TOB -4

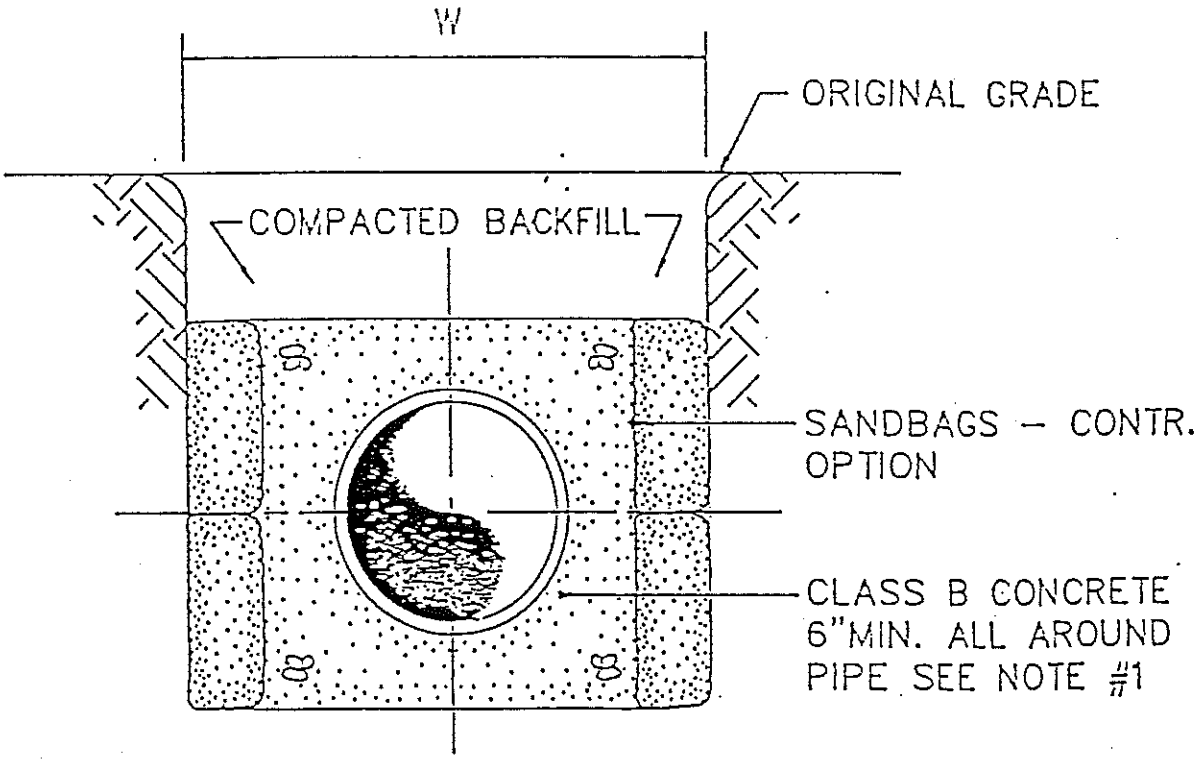

NOTES:

1. CLASS B CONCRETE SHALL BE 3000 PSI MIN. COMPRESSIVE STRENGTH AFTER 28 DAYS.

2. SEE STANDARD NPW-2 FOR DIMENSION OF "W"

TOWN OF BOONE, N.C. STANDARD DETAIL	DATE: JULY, 1989
PIPELINE INSTALLATION CONCRETE ENCASEMENT	NOT TO SCALE
	STANDARD TOB -5

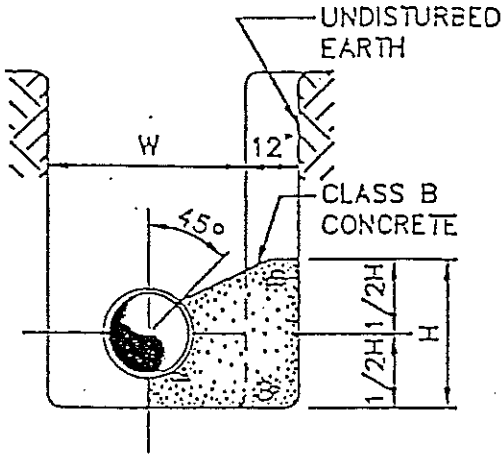

TYPICAL SECTION
TEE OR BEND

CONCRETE THRUST BLOCK SCHEDULE								
PIPE SIZE INCHES	BEND							
	90 (TEE)		45°		22½°		11¼	
	H	L	H	L	H	L	H	L
2"	.75'	1.5'	.50'	1.0'	.50'	.75'	.50	.50'
4"	1.5'	3.0'	1.0'	2.5	1.0'	1.5'	1.0	1.0'
6"	2.0'	4.0'	1.5'	3.5'	1.0'	3.0'	1.0	1.5'
8"	2.5'	5.0'	2.5'	4.0'	1.5'	3.5'	1.0'	2.5'
10"	3.0	6.5'	2.5'	5.0'	2.0'	4.0'	1.0'	3.0'
12"	3.5	8.0'	3.0'	5.0'	2.5'	5.0	1.5'	3.5'

* FOR DESIGN PRESSURE=200 PSI

SIZE SCHEDULE

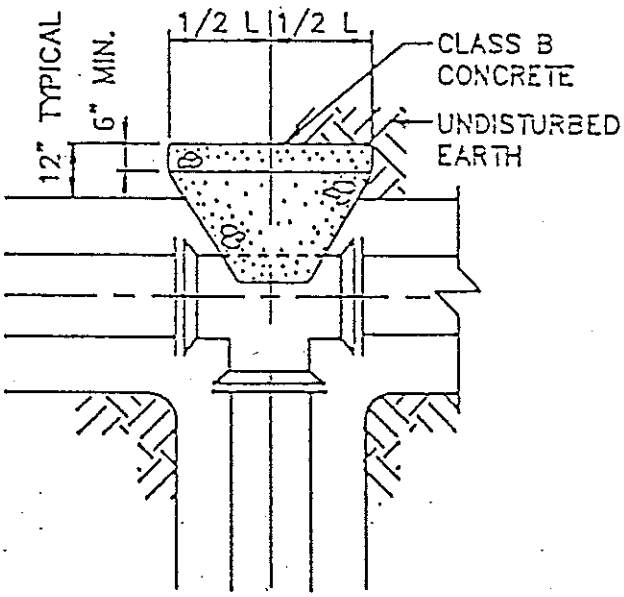

PLAN – TEE

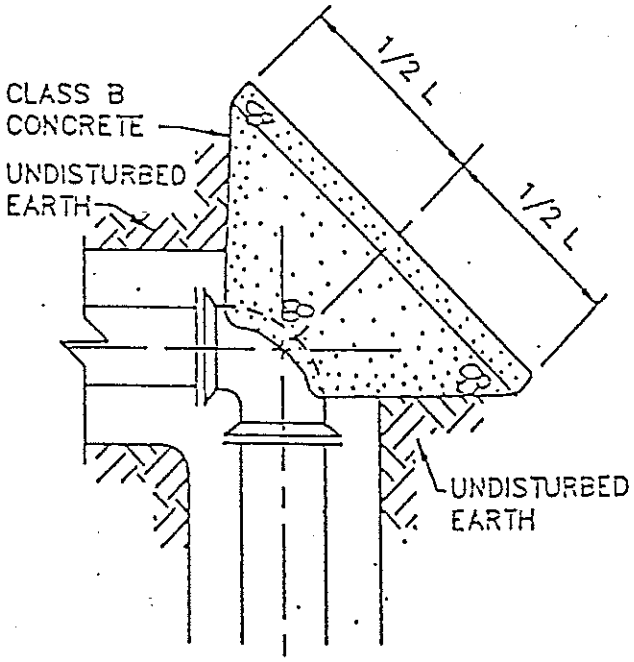

PLAN – BEND

TOWN OF BOONE, N.C. STANDARD DETAIL	DATE: JULY, 1989
WATER SYSTEMS THRUST BLOCKS	NOT TO SCALE
	STANDARD TOB -6

NOTE: FOR VERTICAL BEND (DOWN) IN EXCESS OF $11\frac{1}{4}°$ ANCHORAGE SHALL BE AS DESIGNED BY AN ENGINEER.

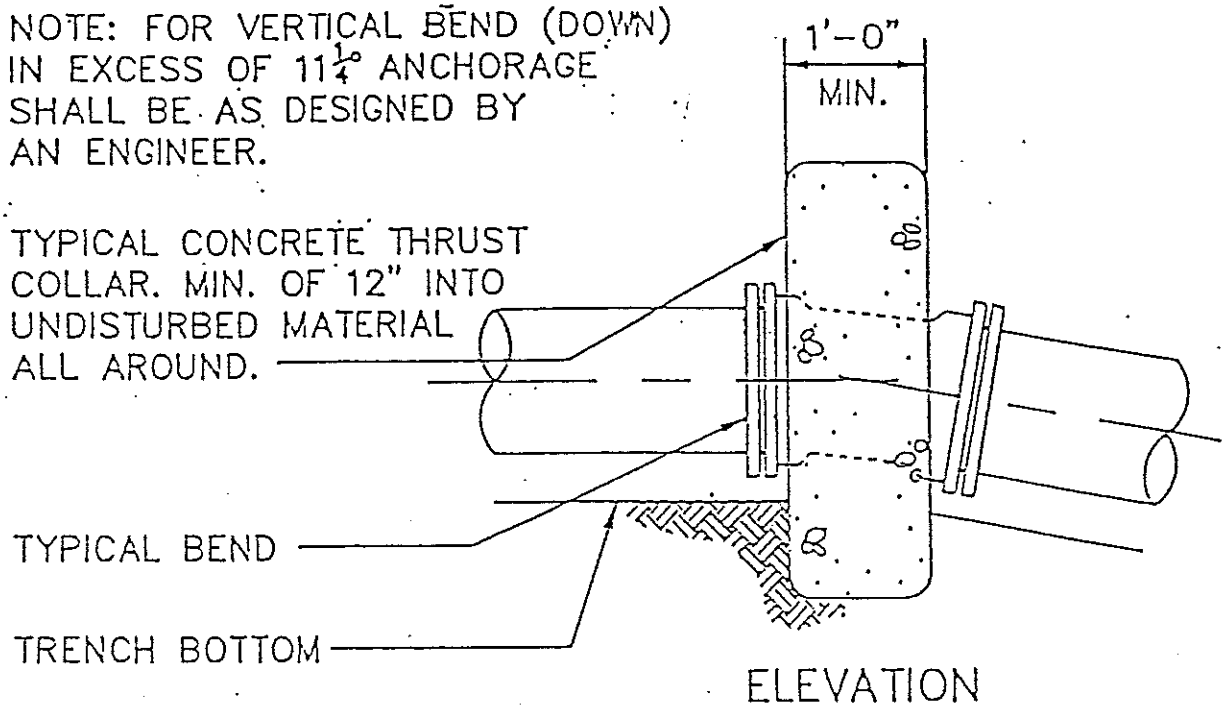

ELEVATION

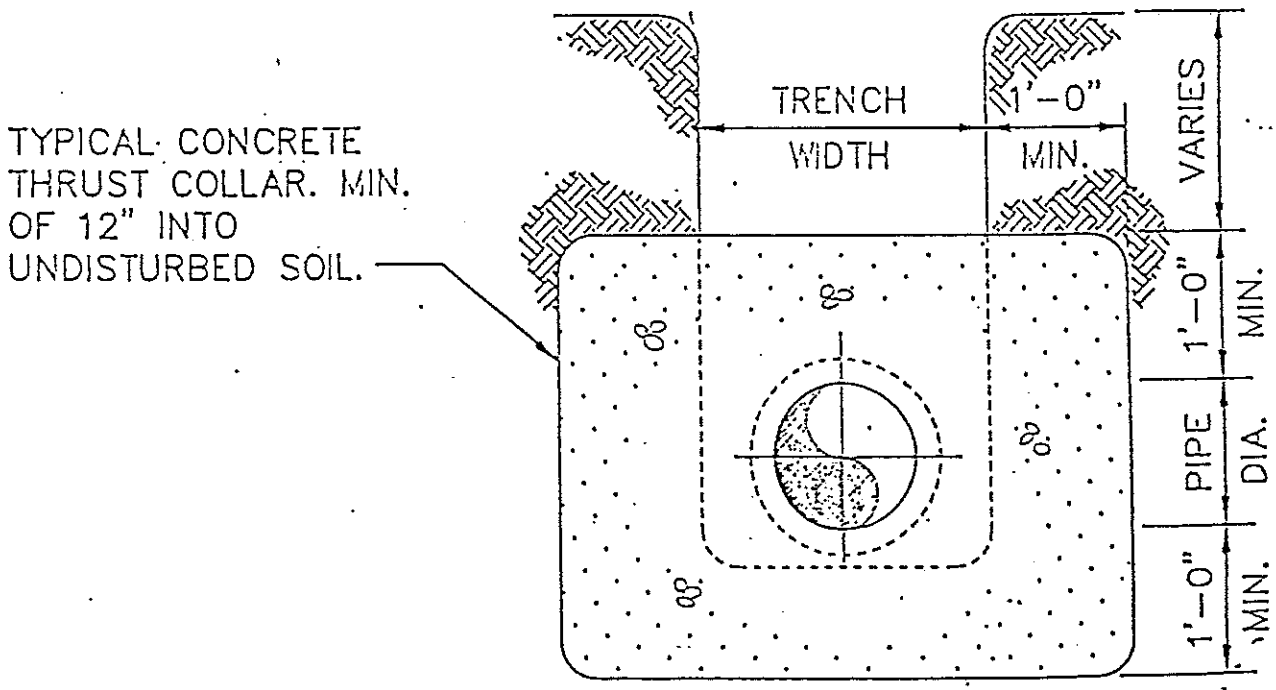

TOWN OF BOONE, N.C. STANDARD DETAIL	DATE: JULY, 1989
WATER SYSTEMS THRUST COLLAR	NOT TO SCALE
	STANDARD TOB-7

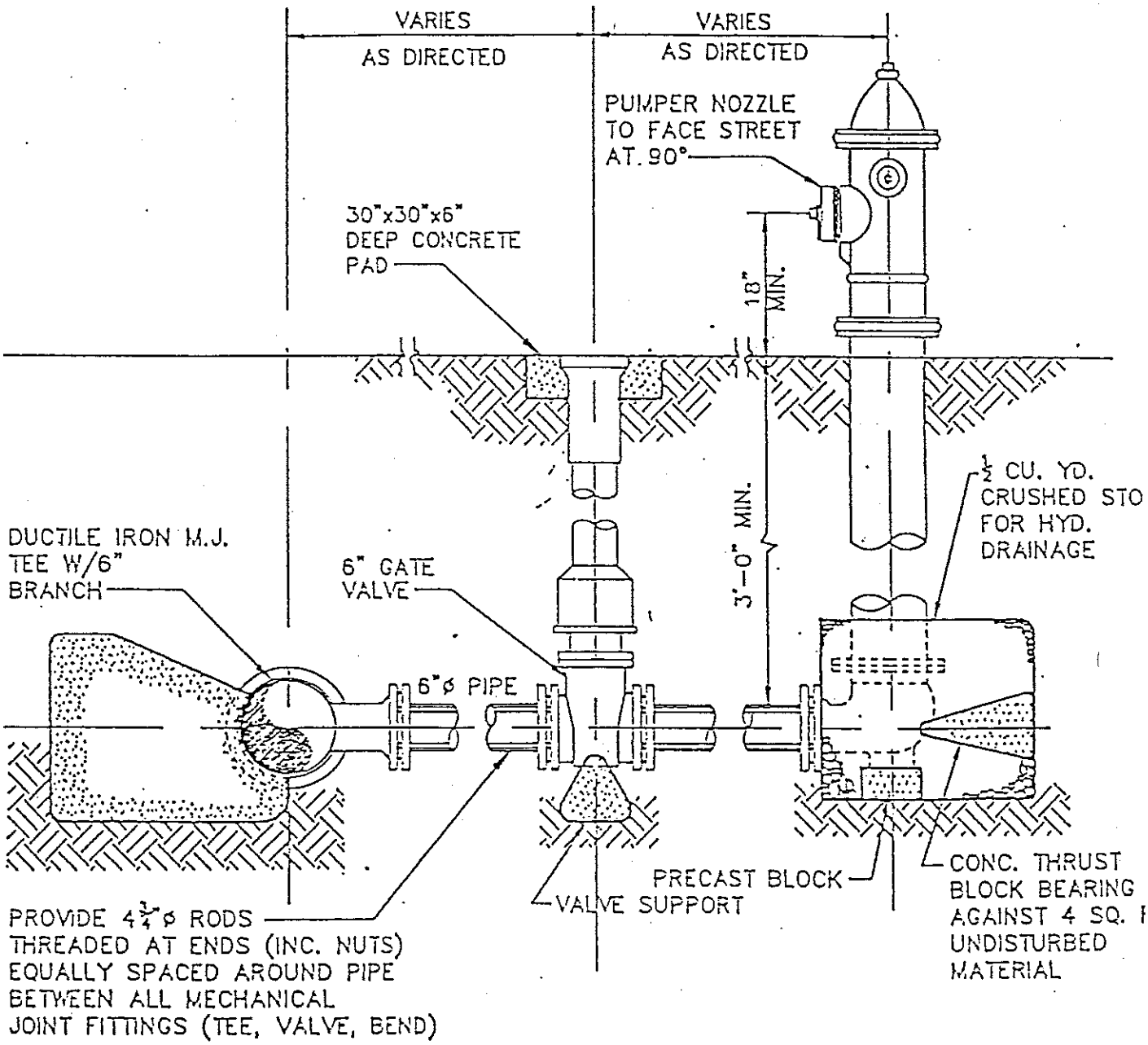

TOWN OF BOONE, N.C. STANDARD DETAIL	DATE: JULY, 1989
WATER SYSTEMS FIRE HYDRANT	NOT TO SCALE
	STANDARD TOB-8

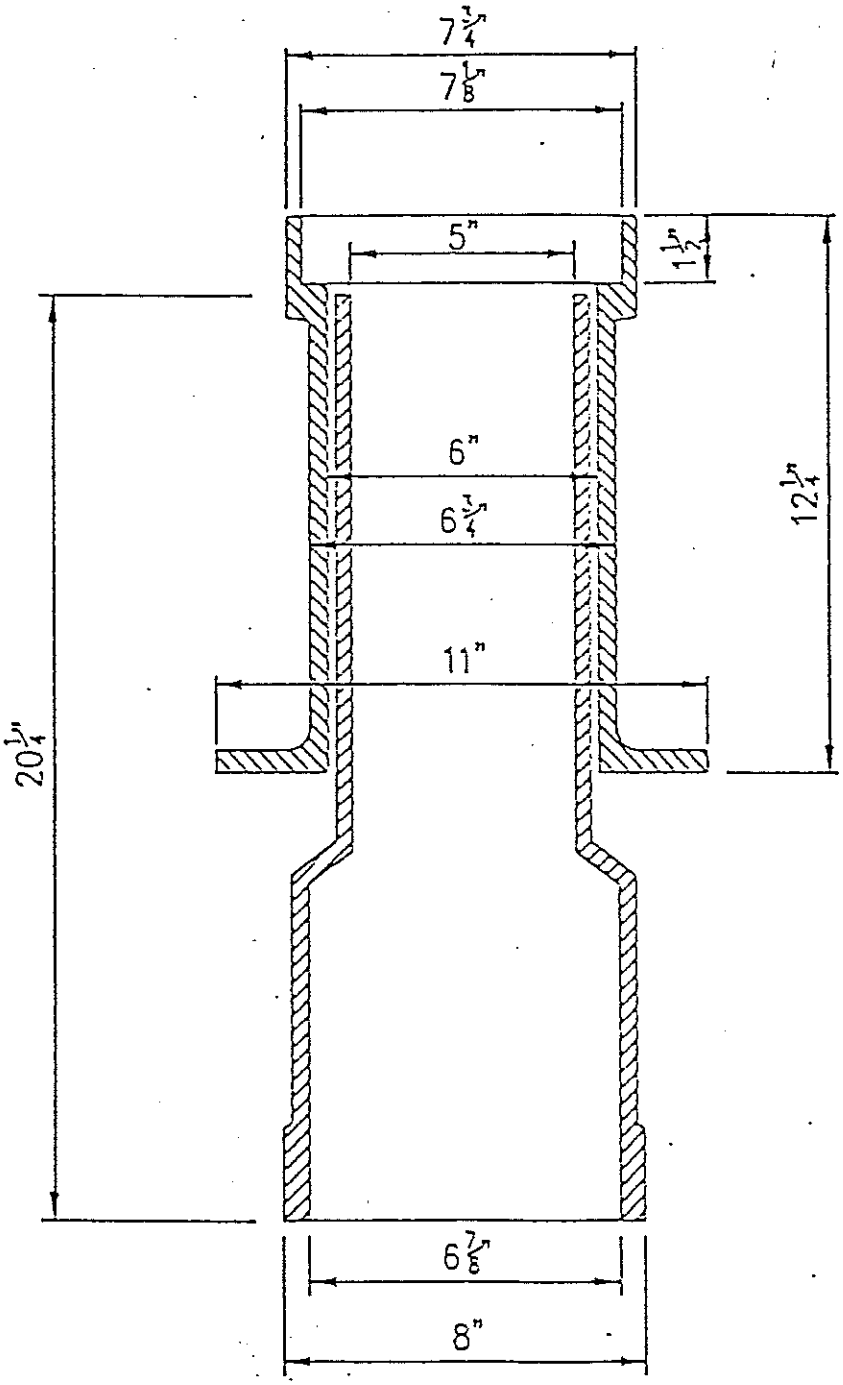

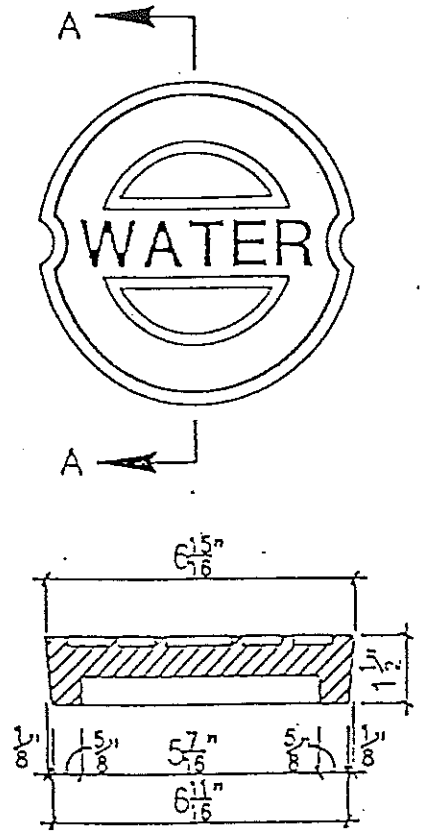

SECTION A–A

AVERAGE WEIGHT – 85 LBS.

NOTE:
BOX IS A DEWEY BROS. OR EQUAL CAST IRON VALVE BOX

TOWN OF BOONE, N.C. STANDARD DETAIL	DATE: JULY, 1989
WATER SYSTEMS STANDARD VALVE BOX	NOT TO SCALE
	STANDARD TOB -9

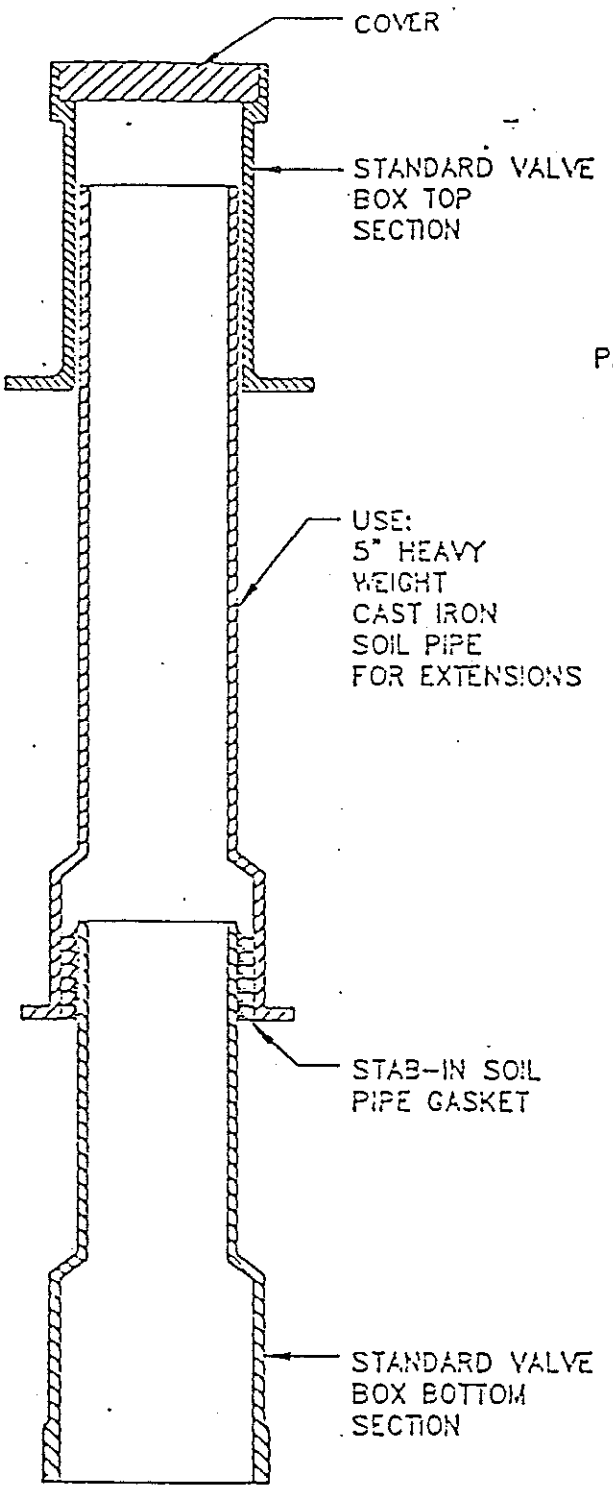

EXTENSION

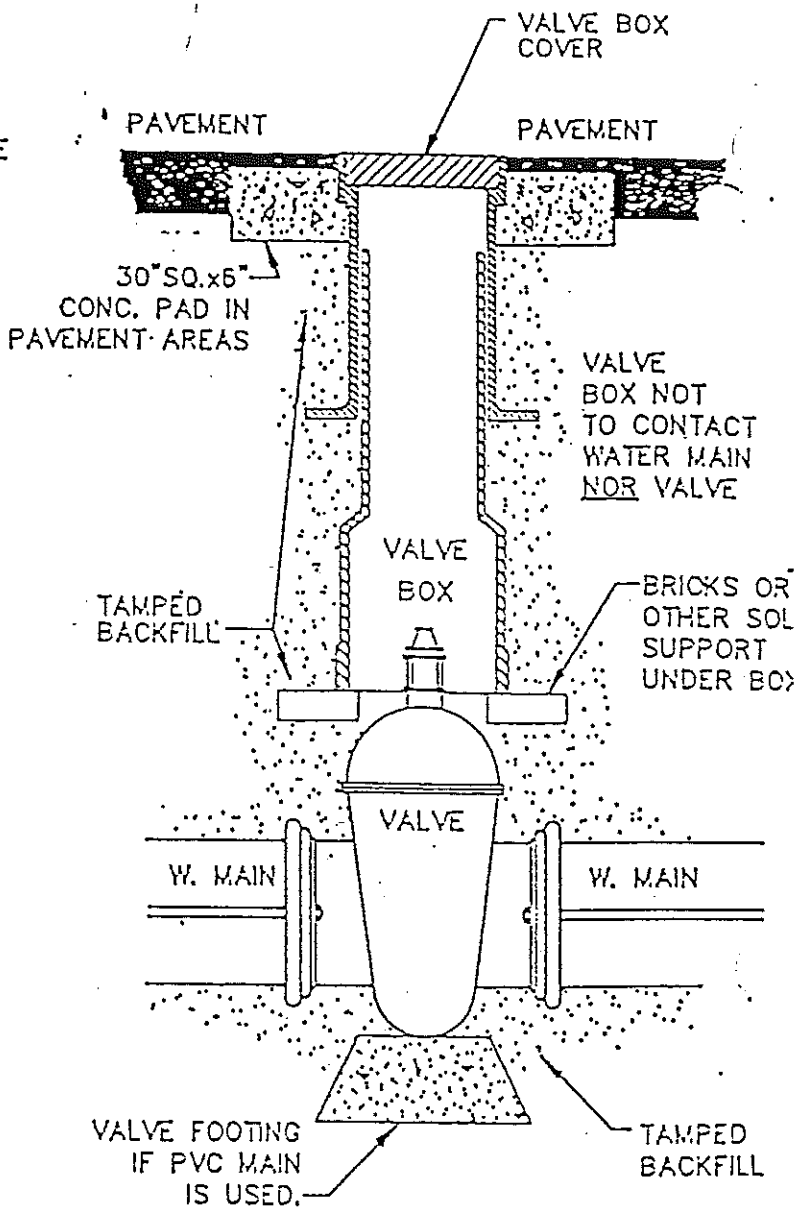

INSTALLATION

NOTE:
IF VALVE IS NOT LOCATED IN A PAVEMENT AREA, PROVIDE 30" SQUARE CONCRETE PAD 6" THICK.

TOWN OF BOONE, N.C. STANDARD DETAIL	DATE: JULY, 1989
WATER SYSTEMS VALVE BOX	NOT TO SCALE
	STANDARD TOB -10

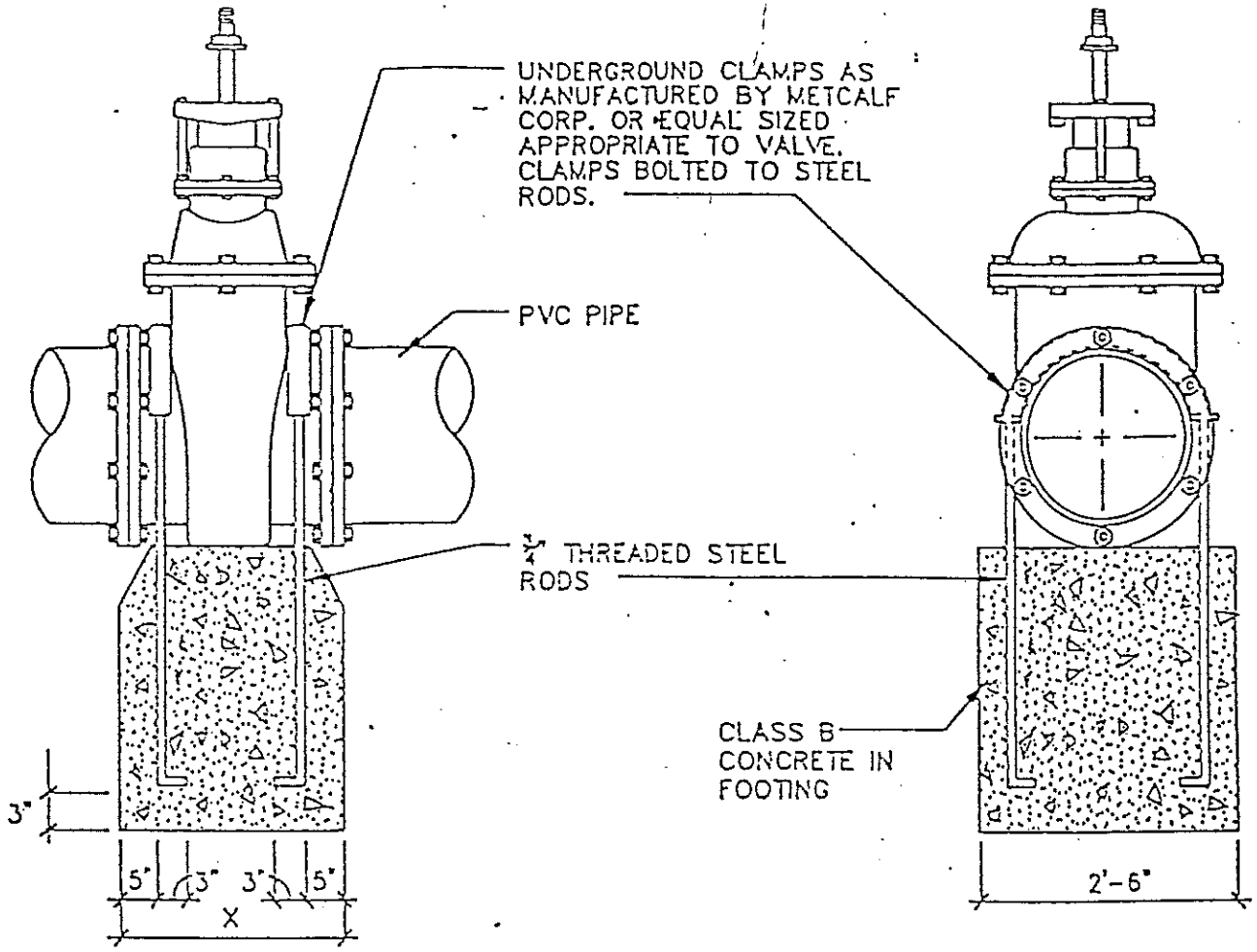

NOTES:

1. RODS SHALL EXTEND TO TOP OF PIPE CROWN.
2. "X" MUST BE AS SHOWN IN THE TABLE BELOW:

LENGTH OF FOOTING FOR VALVE SUPPORTS		
VALVE SIZE	6"	8"
QUICKSAND, POOR SOIL (1000 psf)	36"	54"
GRAVEL, COARSE SAND (1600 psf)	24"	40"
SOFT CLAY (2000 psf)	24"	30"
FAIRLY DRY CLAY, CLEAN DRY SAND (4000 psf)	24"	24"
DRY CLAY, COMPACT SAND (8000 psf)	24"	24"
POOR ROCK (10,000 psf)	24"	24"

3. COAT EXPOSED STEEL RODS AND CLAMPS WITH BITUMINOUS BASE PAINT.

TOWN OF BOONE, N.C. STANDARD DETAIL	DATE: JULY, 1989
WATER SYSTEMS VALVE FOOTING FOR PVC MAINS	NOT TO SCALE STANDARD TOB -11

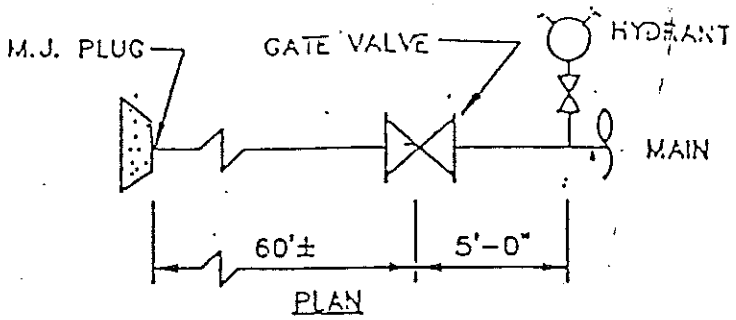

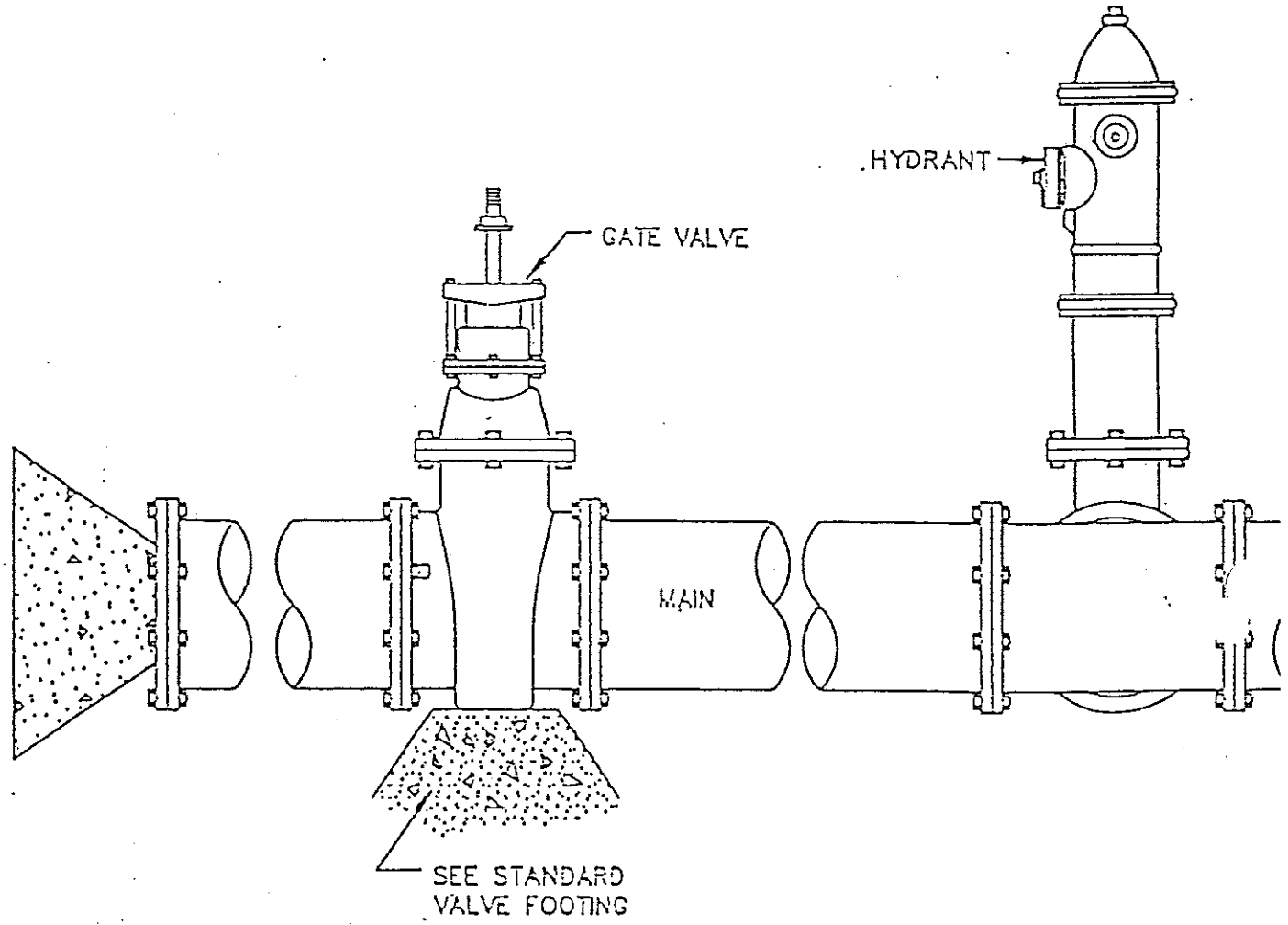

NOTES:

1. SEE STANDARD THRUST BLOCK
2. CONCRETE SHALL NOT CONTACT BOLTS OR ENDS OF MECHANICAL FITTINGS.

TOWN OF BOONE, N.C. STANDARD DETAIL	DATE: JULY, 198
WATER SYSTEMS 6" & LARGER DEAD END LINES	NOT TO SCALE STANDARD TOB -12

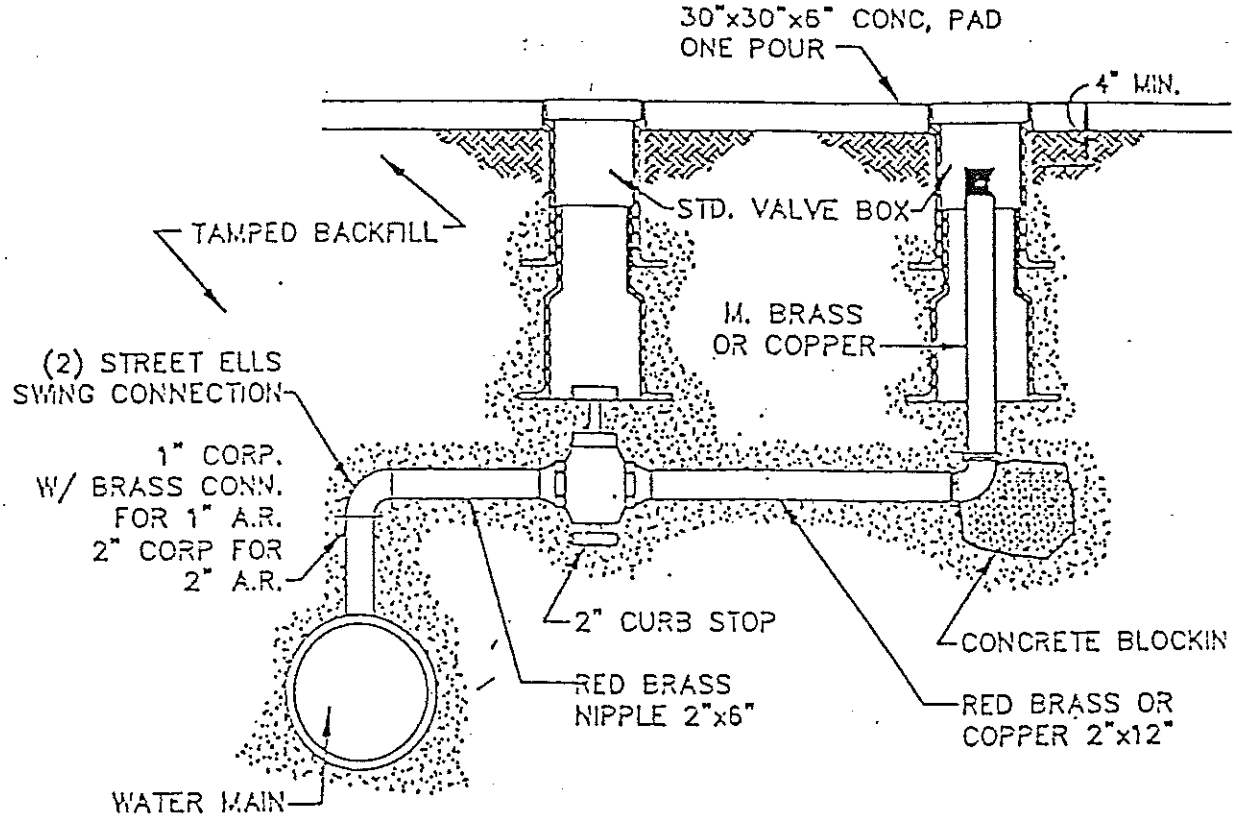

NOTES:

1. PVC IS ACCEPTABLE IF IT IS CLASS 200 AND PROPERLY INSTALLED.
2. AIR VALVES TO BE INSTALLED AT ALL POINTS BETWEEN OUTLETS ON THE PIPE (HYDRANTS, SERVICES, ETC.) WHERE THE ELEVATION OF THE CROWN OF THE PIPE IS HIGHER THAN THE OTHER OUTLETS.
3. ON 12" & SMALLER PIPES, 1" ASSEMBLY REQUIRED.
4. ON 16" & SMALLER PIPES, 2" ASSEMBLY REQUIRED.

TOWN OF BOONE, N.C. STANDARD DETAIL	DATE: JULY, 1989
WATER SYSTEMS AIR RELEASE VALVE	NOT TO SCALE STANDARD TOB -13

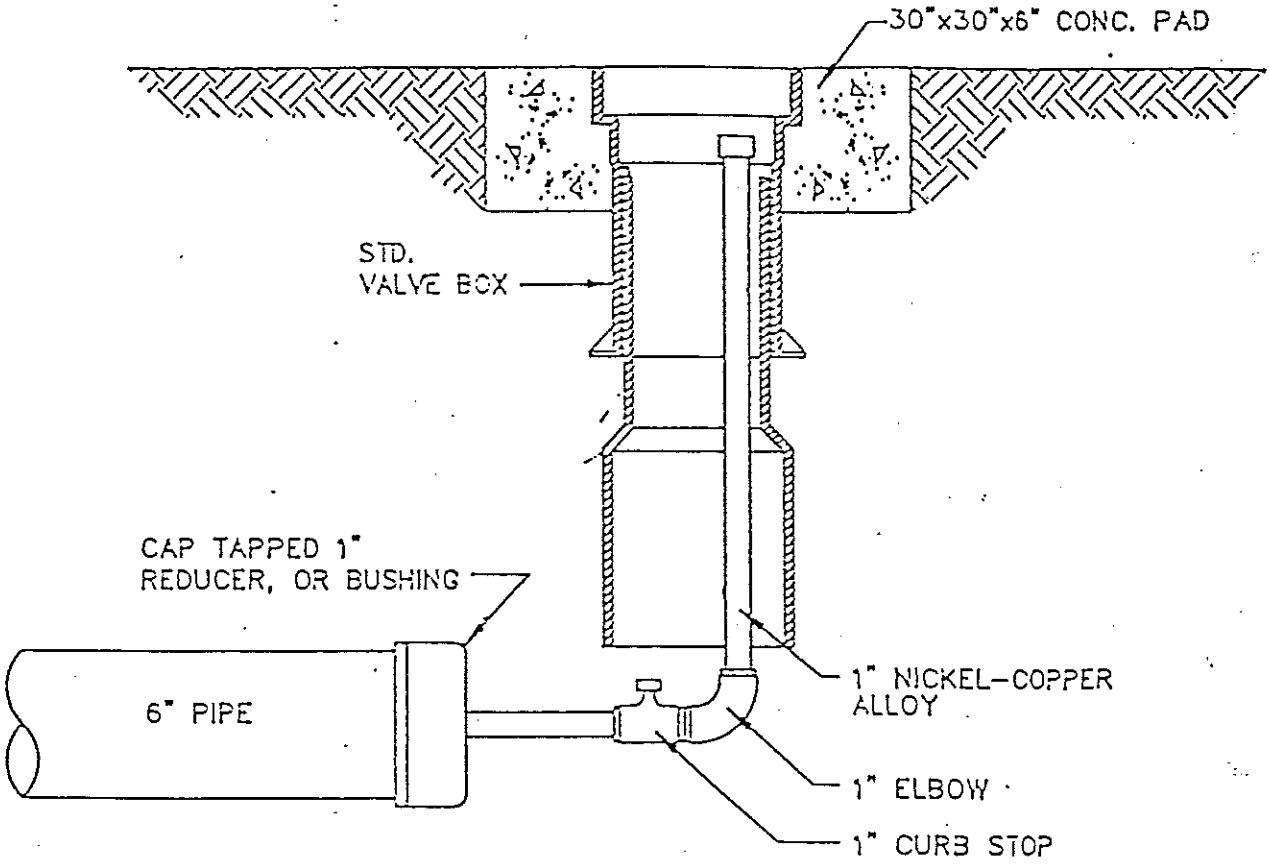

NOTE:
BLOW-OFFS ARE TO BE USED ONLY WITH APPROVAL OF THE DIRECTOR OF PUBLIC WORKS. UNDER NORMAL CIRCUMSTANCE, A FIRE HYDRANT SHALL BE REQUIRED AT ALL DEAD ENDS. SEE STANDARD NPW-12.

TOWN OF BOONE, N.C. STANDARD DETAIL	DATE: JULY, 1989
WATER SYSTEMS 6" AND SMALLER END OF MAIN	NOT TO SCALE STANDARD TOB -14

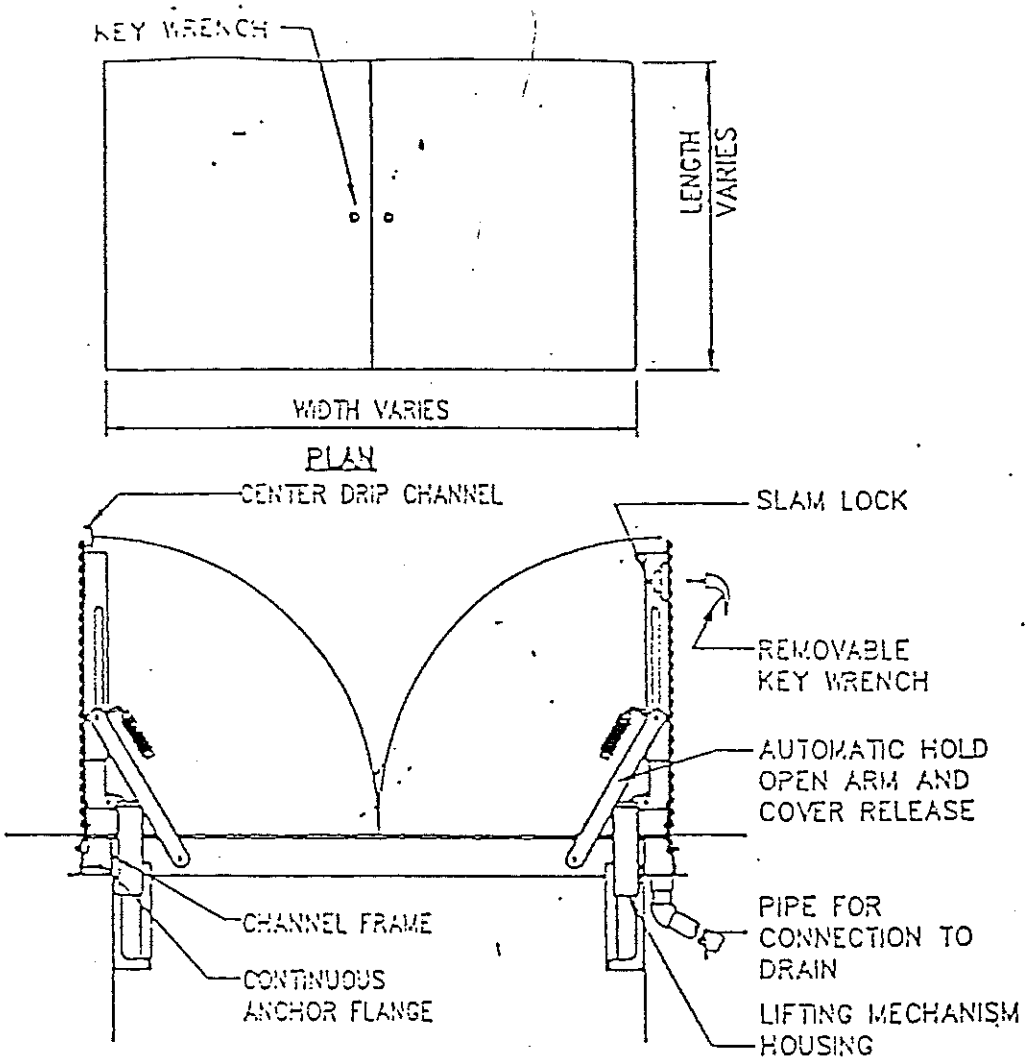

NOTES:

1. VAULTS SHALL BE USED TO ENCLOSE METERS LARGER THAN 2", BACKFLOW PREVENTERS LARGE THAN 2",ALL METERS WITH BY-PASS,DETECTOR CHECKS AND WHEN REQUIRED BY THE DIRECTOR OF PUBLIC WORKS.

2. VAULTS SHALL BE OF ADEQUATE SIZE AND UNLESS OTHERWISE SPECIFIED PROVIDE A MINIMUM CLEAR DISTANCE OF 2' BETWEEN SIDEWALLS AND COMPONENTS.

3. VAULT LIDS SHALL BE LARGE ENOUGH TO PROVIDE PASSAGE OF PERSONNEL & EQUIPMENT BUT IN NO CASE SMALLER THAN 30" WIDE & 30" LENGTH.

4. VAULT LIDS SHALL BE BILCO TYPE J OR JD ALUMINUM ACCESS DOOR OR EQUAL. DOORS SHALL BE SINGLE OR MULTIPLE LEAF & EACH LEAF SHALL HAVE LIFT ASSIST. DOORS SHALL BE EASILY LIFTED BY ONE PERSON. THE LATCH SHALL HAVE A REMOVABLE KEY WRENCH. DOORS SHALL BE DESIGNED FOR THE TRAFFIC LOADS WHICH WILL BE ENCOUNTERED.

5. VAULTS SHALL BE PRECAST AS MANF. BY TINDALL OR EQUAL OR BLOCK; DESIGNED FOR APPROPRIATE DEPTH & STRESSES.

6. VAULTS SHALL BE PIPE DRAINED TO THE NEAREST LOW POINT OR IF THIS IS NOT POSSIBLE OR REASONABLE AS APPROVED BY THE DIRECTOR OF PUBLIC WORKS, A 30"SQ X 1' DEEP SUMP SHALL BE PROVIDED IN THE FLOOR OF THE VAULT. FLOOR SHALL BE SLOPED TO EITHER THE FLOOR DRAIN OR THE SUMP.

TOWN OF BOONE, N.C. STANDARD DETAIL	DATE: JULY, 1989
WATER SYSTEMS VAULTS	NOT TO SCALE
	STANDARD TOB-15

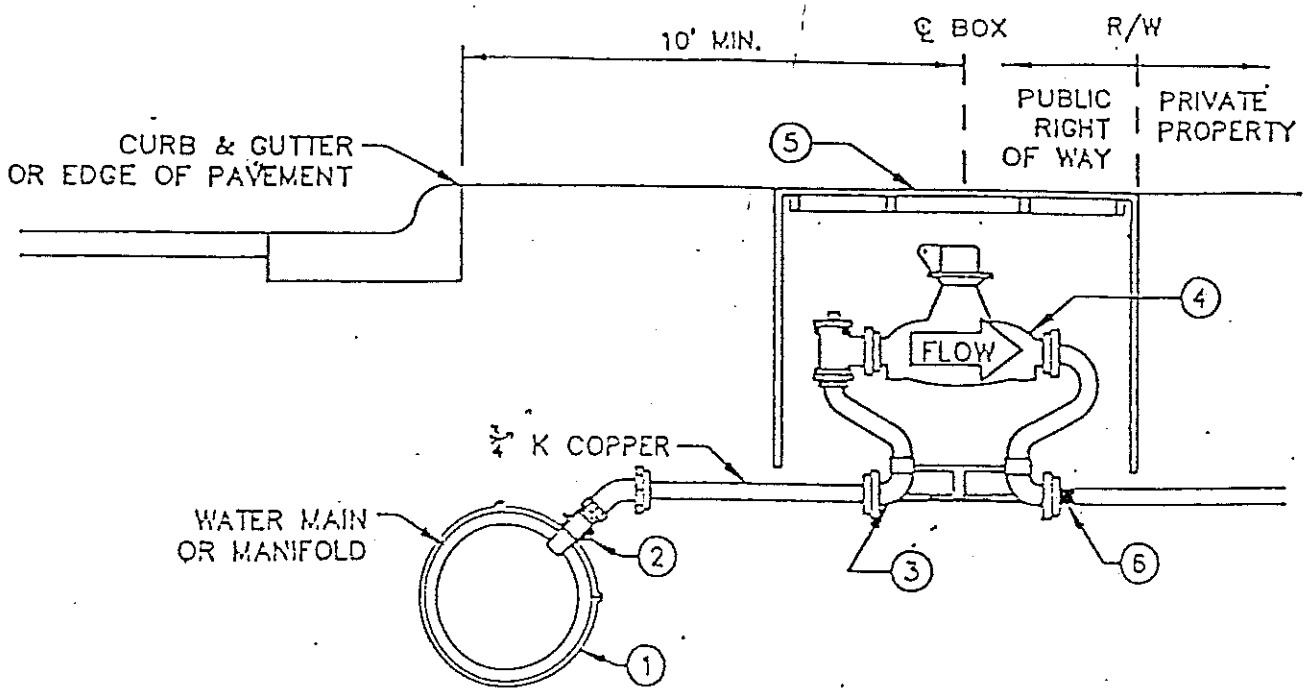

1. SERVICE CLAMP
   MUELLER H16100 SERIES – ALL BRONZE DOUBLE STRAP, CORPORATION COCK THREAD
2. CORPORATION COCK – ¾" FORD
3. * COPPER SETTER – FORD W/LOCKING WINGS ON ANGLE VALVE
4. ** METER W/INTERNAL BACKFLOW PREVENTER
5. * METER BOX – CAST IRON DEWEY BROTHERS TYPE "C"
6. * BRASS PLUG – TEMPORARY

* MUST BE PURCHASED FROM THE CITY.
** FURNISHED AND INSTALLED BY CITY

NOTE:
WHERE SERVICE IS ON OPPOSITE SIDE OF STREET FROM WATER MAIN, AND ROAD IS EXISTING & PAVED, THE COPPER SERVICES SHALL BE INSTALLED BY BORING. NO CASING WILL BE REQUIRED FOR ¾" SERVICES.

TOWN OF BOONE, N.C. STANDARD DETAIL	DATE: JULY 1989
WATER SYSTEMS RESIDENTIAL METER CONNECTION	NOT TO SCALE STANDARD TOR -16

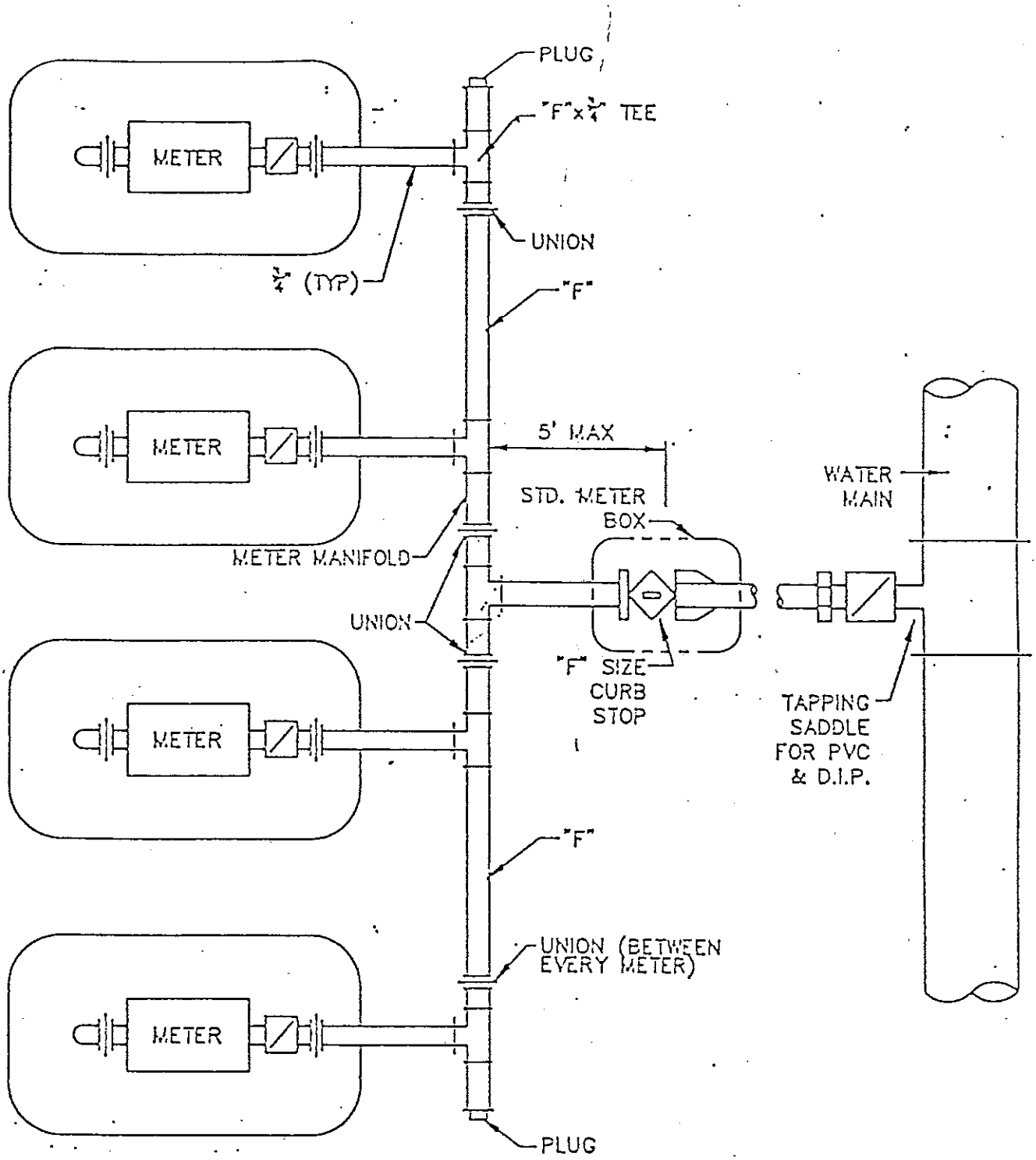

METER MANIFOLD

NO. OF METERS	SIZE "F" (I.D.)	MATERIALS
20–11	3"	BRASS, OR PVC CLASS 200
10–5	2"	BRASS, OR PVC CLASS 200
4	1½"	COPPER TYPE K
2	1"	COPPER TYPE K

TOWN OF BOONE, N.C. STANDARD DETAIL	DATE: JULY, 1989
WATER SYSTEMS MULTIPLE METER ASSEMBLY	NOT TO SCALE
	STANDARD TOB –17

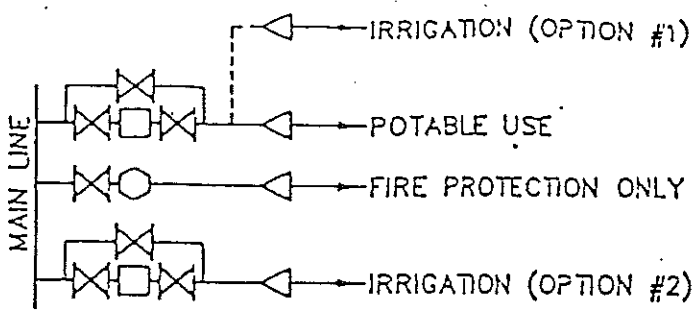

MASTER METER
COMMERCIAL / MULTIFAMILY

LEGEND:

- METER
- BACKFLOW PREVENTER
- DETECTOR CHECK
- VALVED BYPASS REQUIRED ON ALL METERS GREATER THAN 1"
- GATE VALVE
- CORPORATION STOP
- UNION

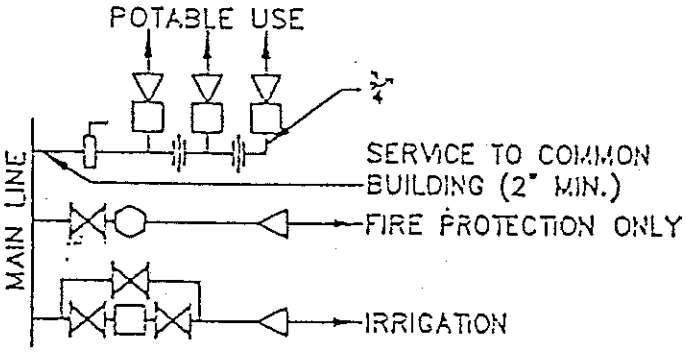

INDIVIDUAL SERVICES
COMMERCIAL / MULTIFAMILY

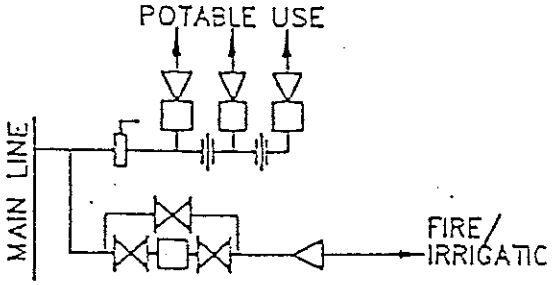

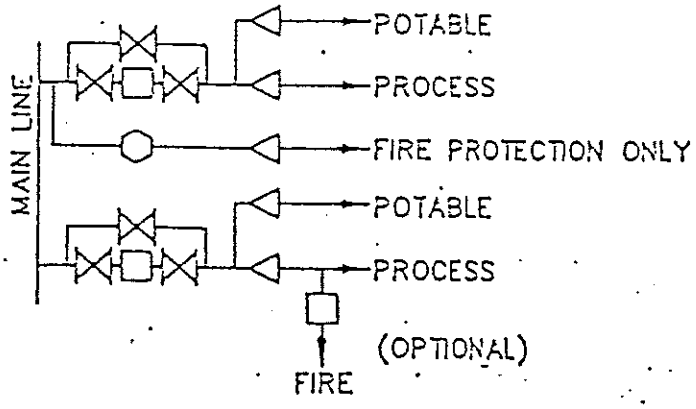

INDUSTRIAL

NOTES:

1. CITY WILL LOCK ALL BY-PASS VALVES. PROVISIONS MUST BE MADE INSIDE VAULT SO HANDWHEEL OF VAULT CAN BE CHAIN & LOCKED TO PIPE OR VAULT WALL.
2. SEE STANDARD NPW-15 FOR DETAILS ON VAULT REQUIRED TO HOUSE METERS, BACKFLOW PREVENTERS, DETECTOR CHECKS, ETC.
3. SEE STANDARD NPW-16 FOR ¾" SERVICE.

TOWN OF BOONE, N.C. STANDARD DETAIL	DATE: JULY, 1989
WATER SYSTEMS TYPICAL METER ARRANGEMENTS	NOT TO SCALE STANDARD TOB -18

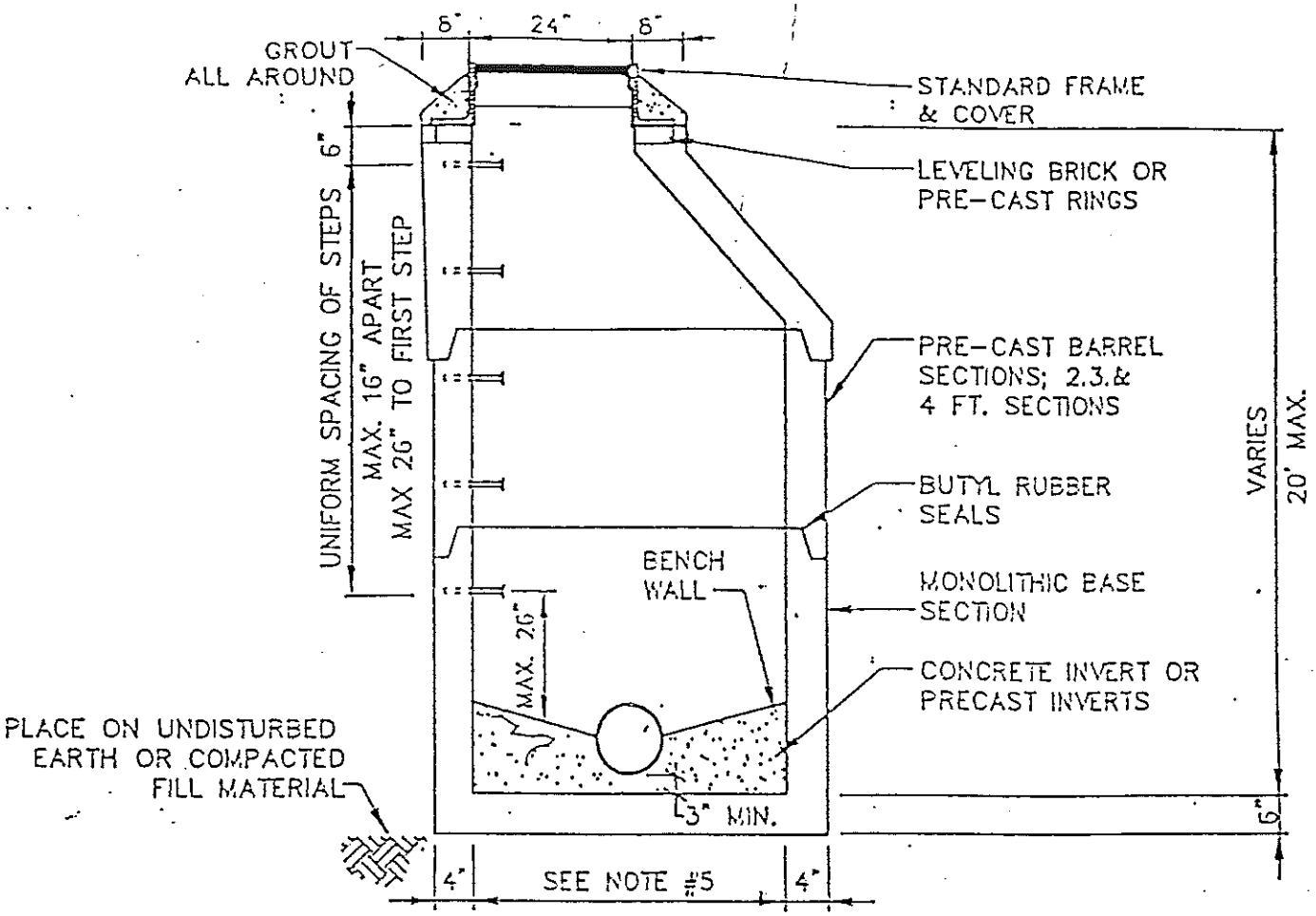

SECTION

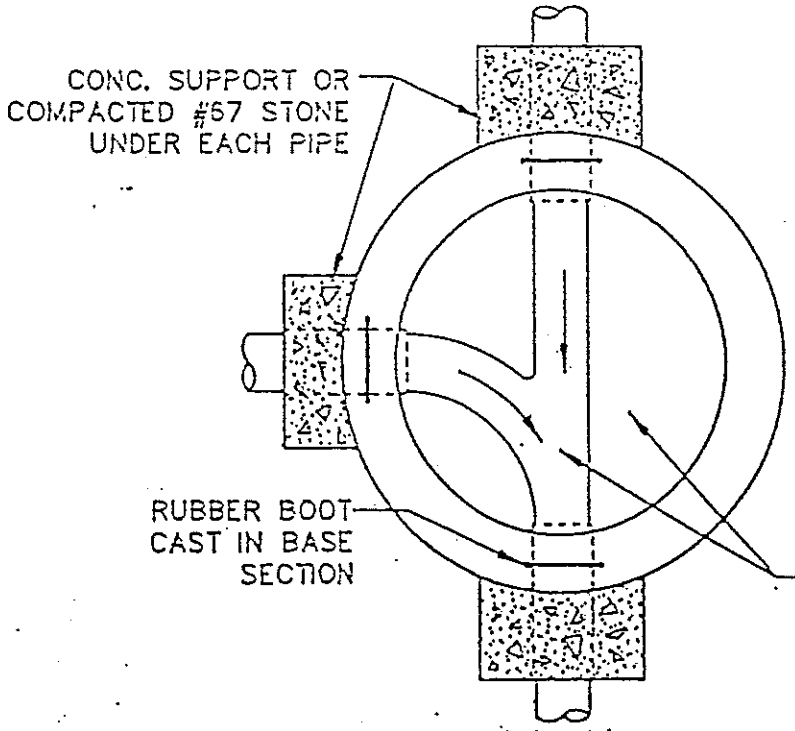

PLAN

NOTES:

1. MANHOLE TO CONFORM WITH ASTM C478.
2. ALL JOINTS SHALL CONFROM WITH ASTM C443.
3. STEPS TO BE PLASTIC PER CITY STANDARDS.
4. BUTYL RUBBER SEALANT TO MEE FEDERAL SPECIFICATION (GSA-FS SS-S-00210.
5. 48" DIA. M.H., PIPES 8"-18"
   60" DIA. M.H., PIPES 21"-30"

TOWN OF BOONE, N.C. STANDARD DETAIL	DATE: JULY, 1989
SEWER SYSTEMS PRECAST MANHOLE	NOT TO SCALE
	STANDARD TOB -19

NOTES:

1. MANHOLE BASE SHALL BE 3600 P.S.I. CONCRETE PLACED ON UNDISTURBED EARTH AND MAY BE PLACED AGAINST SHAPED BANKS IN LIEU OF FORMS
2. ALL MASONRY MORTAR SHALL BE PORTLAND CEMENT 1:3 MIX.
3. CARE MUST BE TAKEN TO FORM A SMOOTH FINISH TROUGH FROM ENTRANCE PIPES TO EXIT PIPE, AND IN CURVED MANHOLES THE TROUGH MUST BE A SMOOTH CIRCULAR ARC TANGENT TO THE INSIDE WALLS OF THE PIPES AT THEIR ENDS.
4. PROTECTIVE WALL FOR OUTSIDE DROP SHALL BE A MINIMUM OF 8" MASONRY
5. THE SLOPE OF THE OUTSIDE DROP TROUGH SHALL BE ¼" PER FOOT.
6. MANHOLE TO CONFORM WITH ASTM C4 AND PRECAST MANHOLE STD.
7. RAMSET MASONRY TIES EVERY 12 INC ON OUTSIDE DROP.

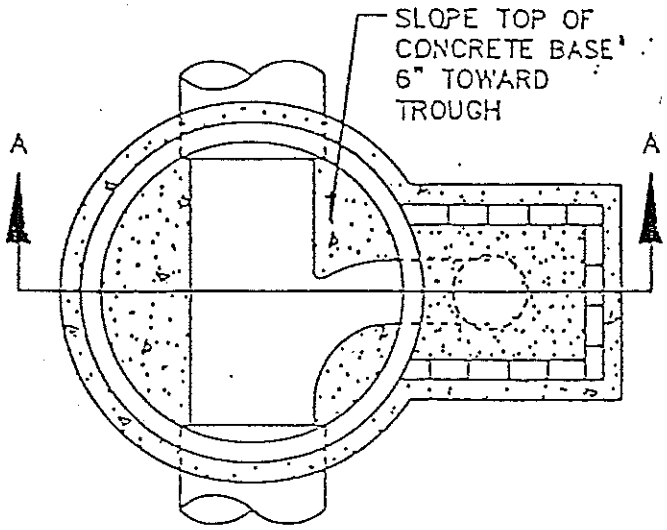

PLAN

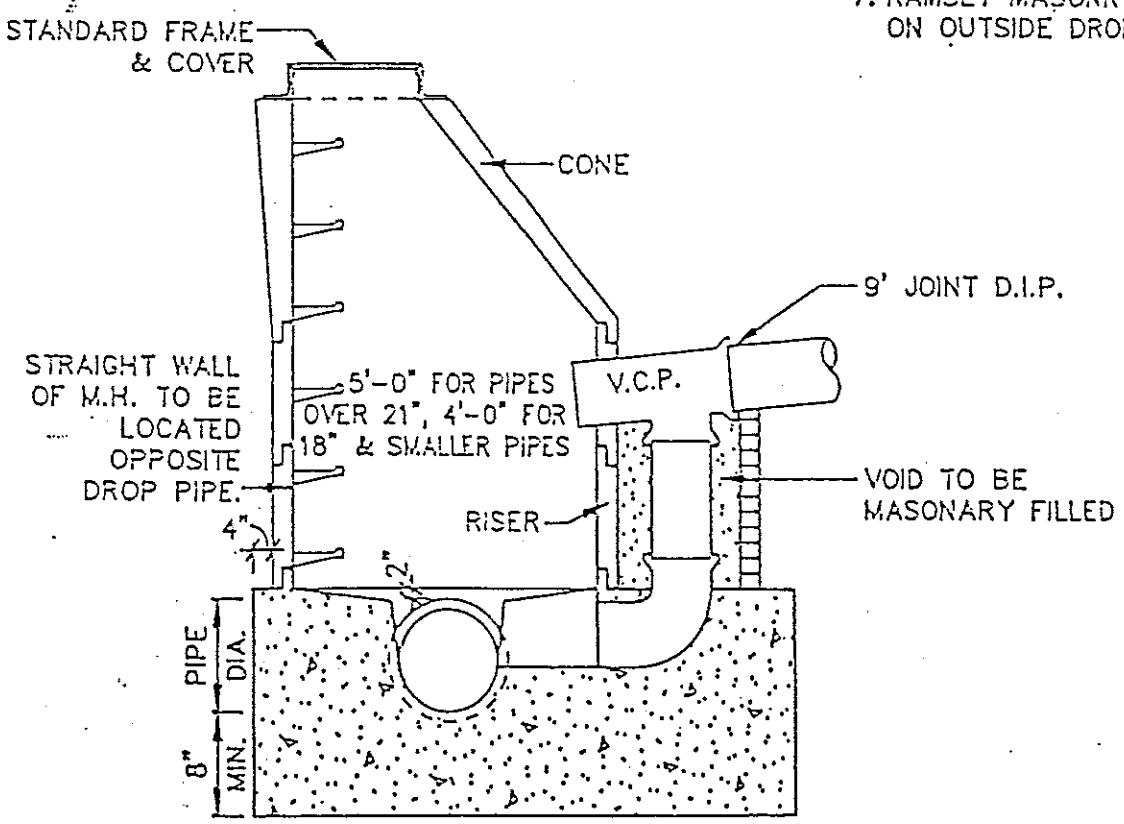

SECTION A–A

TOWN OF BOONE, N.C. STANDARD DETAIL	DATE: JULY 1989
SEWER SYSTEMS PRECAST M.H. W/OUTSIDE DROP	NOT TO SCALE STANDARD TOB -20

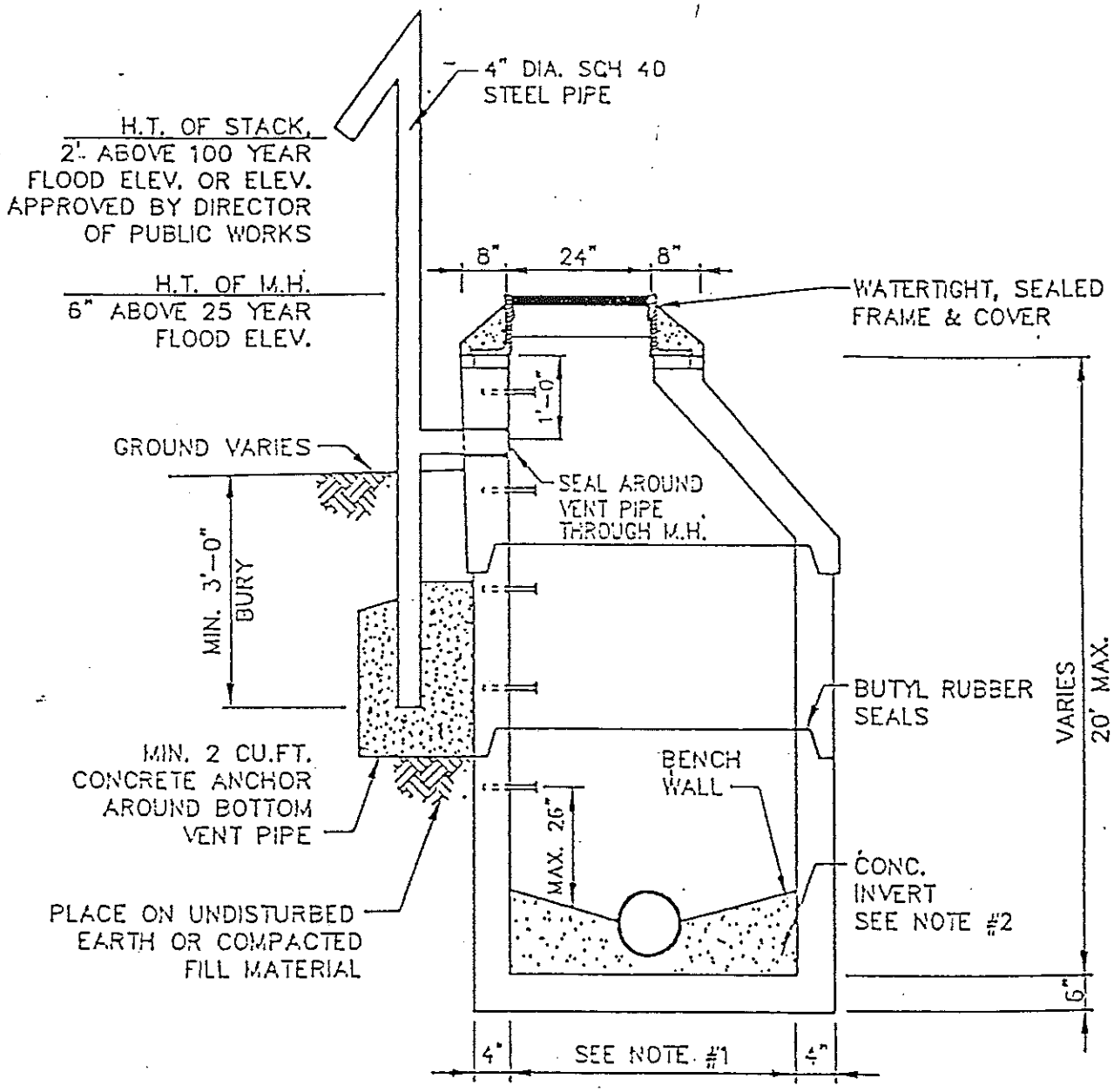

M.H. SECTION

NOTES:

1. 4'-0" I.D. FOR 18" & SMALLER PIPES.
   5'-0" I.D. FOR 21" & LARGER PIPES.

2. PRECAST CONC. INVERTS MAY BE USED IN LIEU OF POURED BASES.

TOWN OF BOONE, N.C. STANDARD DETAIL	DATE: JULY 1989
SEWER SYSTEMS MANHOLE VENT	NOT TO SCALE STANDARD TOB -21

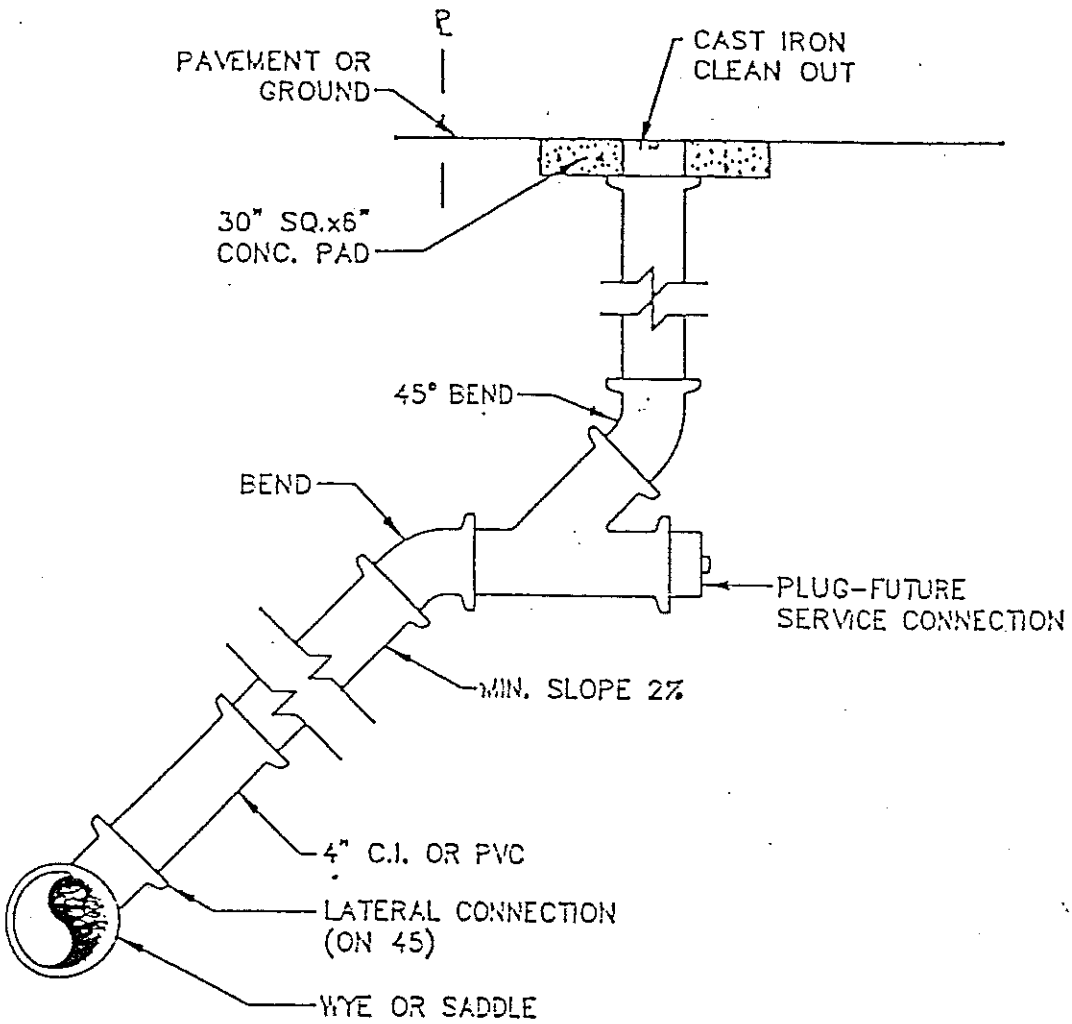

NOTES:

1. THE FULL LENGTH OF THE SERVICE DITCH SHALL BE COMPACTED IN 6" LAYERS WITH MECHANICAL TAMP.
2. PVC SHALL BE SDR 26
3. THE CITY SHALL MAKE TAPS ON EXISTING LINES

TOWN OF BOONE, N.C. STANDARD DETAIL	DATE: JULY, 1989
SEWER SYSTEMS TAP & STUB-OUT	NOT TO SCALE
	STANDARD TOB -22

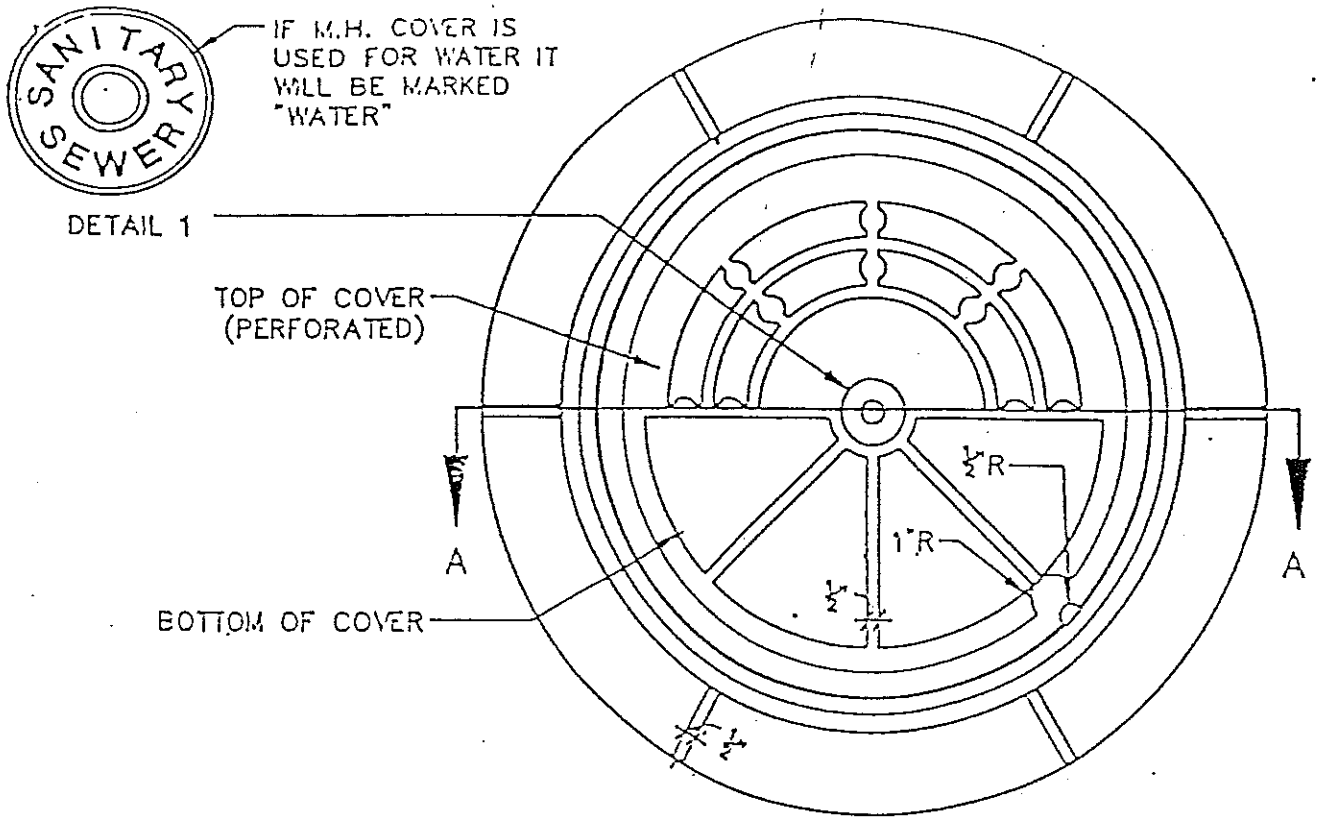

PLAN

NOTES:

1. DIMENSIONS MAY VARY SLIGHTLY, BUT MANHOLE RING AND COVER ARE TO BE INTERCHANGEABLE WITH DIMENSIONS SHOWN.
2. HEAVY DUTY CAST IRON, ASTM 48-76 CLASS 35
3. SEALED MANHOLES SHALL BE PROVIDED W/GASKETS AND A MINIMUM OF 4 BOLT DOWNS.

MINIMUM AVERAGE WEIGHT	
COVER	120 lbs.
FRAME	190 lbs.
UNIT	310 lbs.

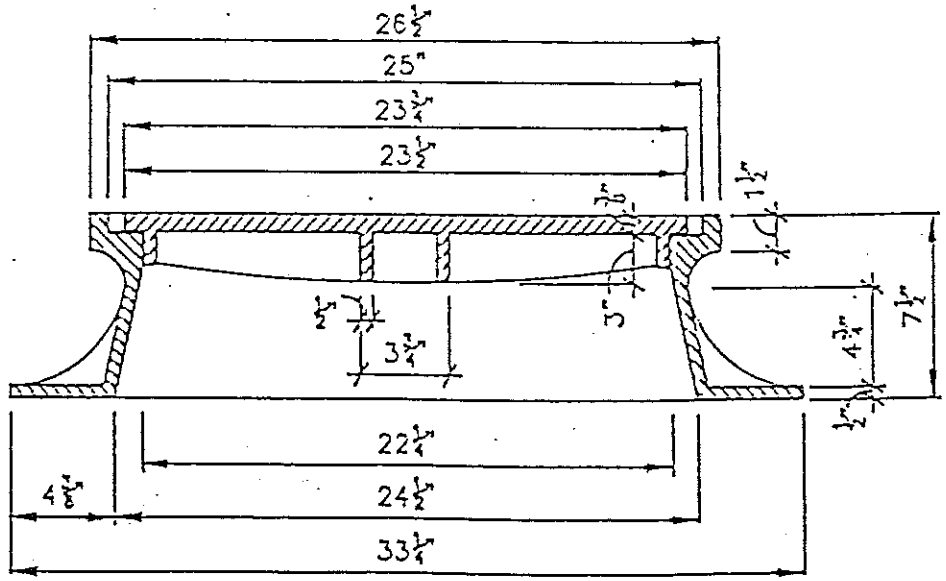

SECTION A–A

TOWN OF BOONE, N.C. STANDARD DETAIL	DATE: JULY, 1989
SEWER SYSTEMS MANHOLE COVER	NOT TO SCALE
	STANDARD TOB -23

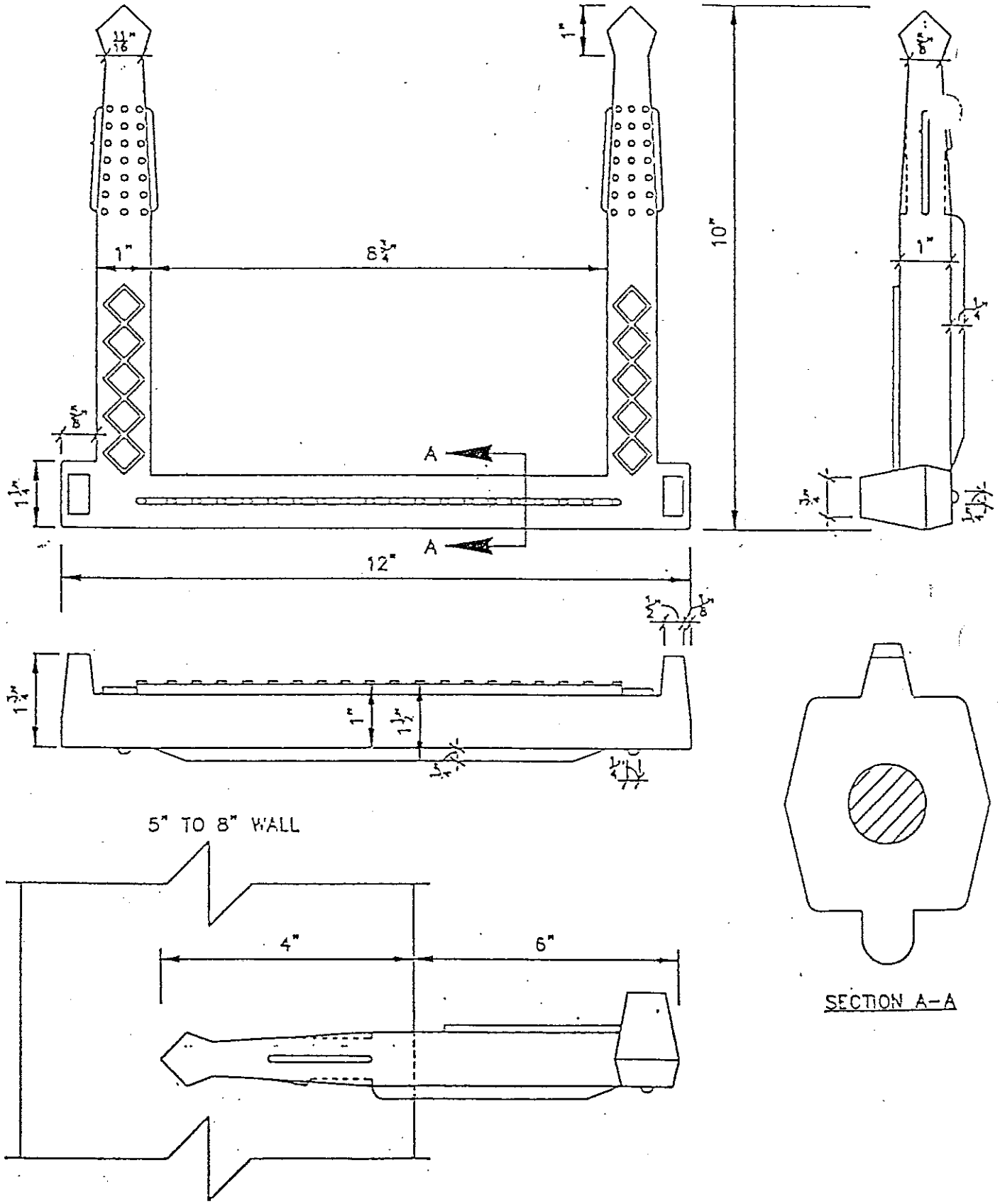

TOWN OF BOONE, N.C. STANDARD DETAIL	DATE: JULY 1984
SEWER SYSTEMS PLASTIC MANHOLE STEP	NOT TO SCALE STANDARD TOB -24

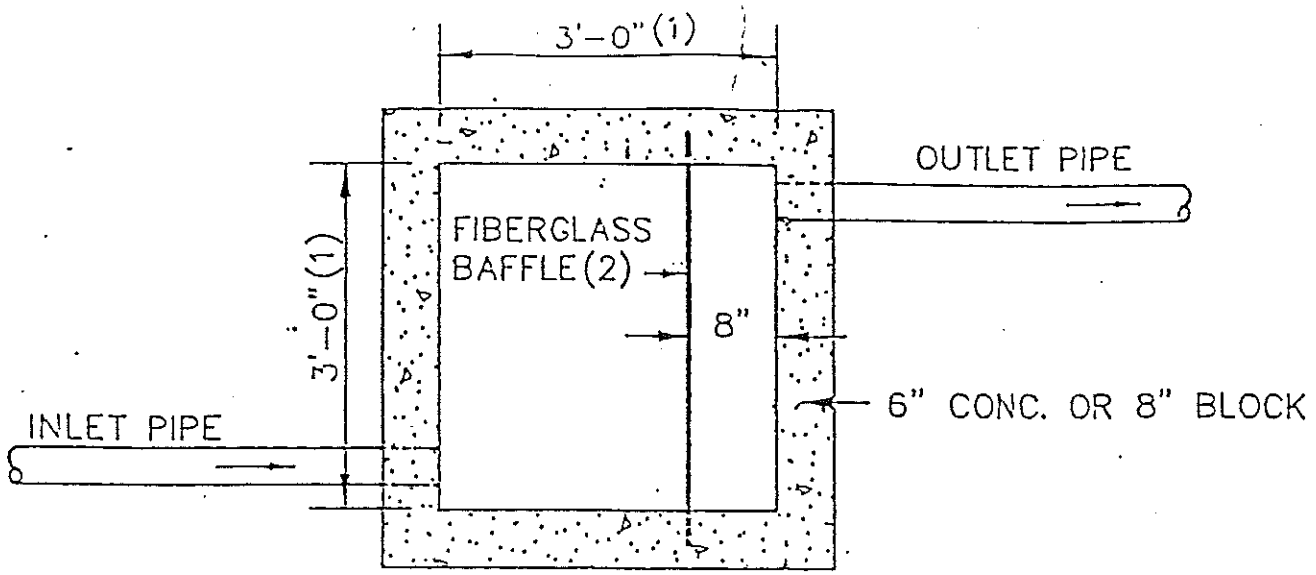

TOP VIEW

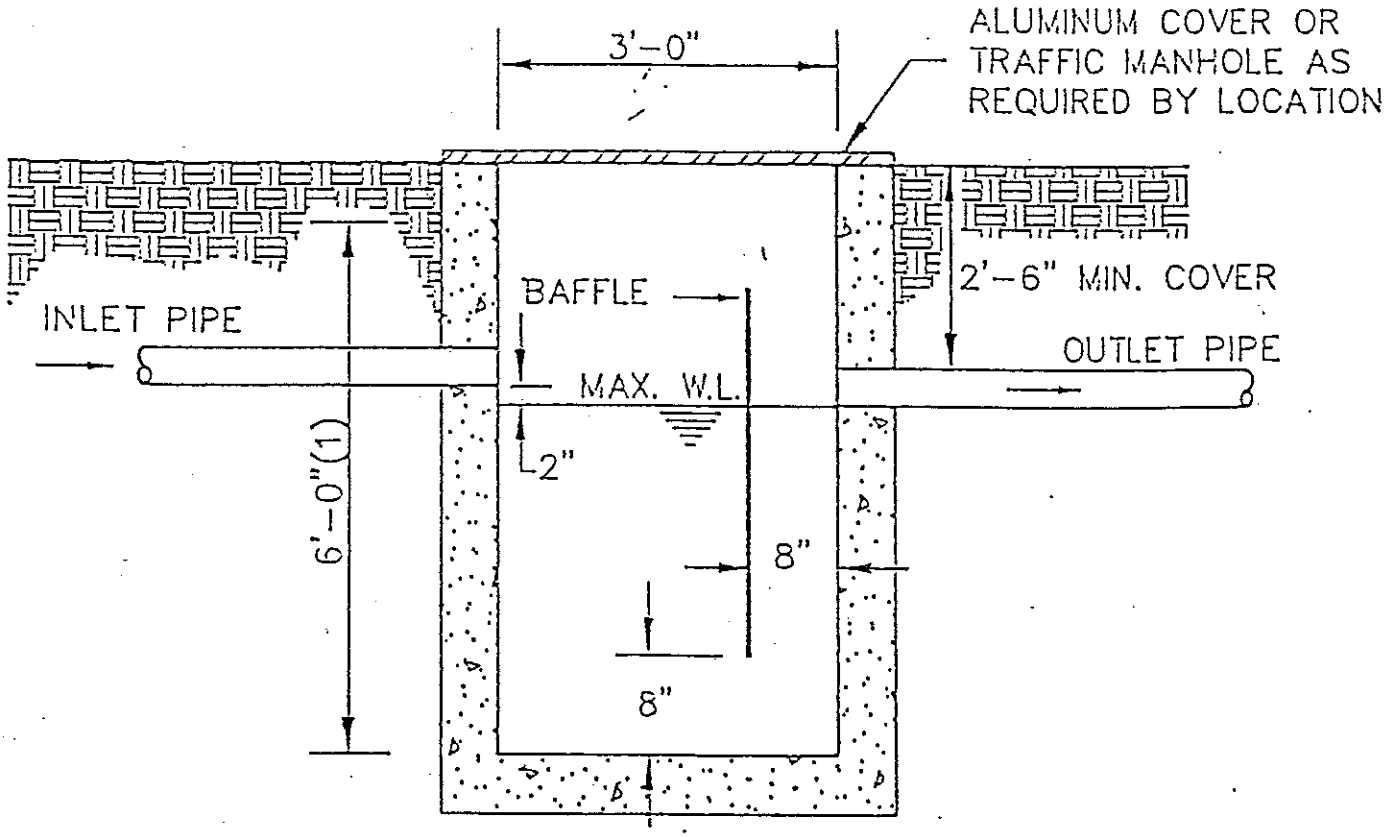

SIDE VIEW

NOTES:

(1) THIS IS THE SMALLEST TRAP TO BE INSTALLED. TRAPS SHALL BE SIZEI FOR MIN.30 MINUTES DETENTION TIME BASED ON AVER. DAILY FLOW.
(2) FIBERGLASS OR 4" BLOCK(CMU) COULD BE USED FOR THE BAFFLE.

TOWN OF BOONE, N.C. STANDARD DETAIL	DATE: JULY, 1989
SEWER SYSTEMS GREASE TRAP	NOT TO SCALE
	STANDARD TOB -25

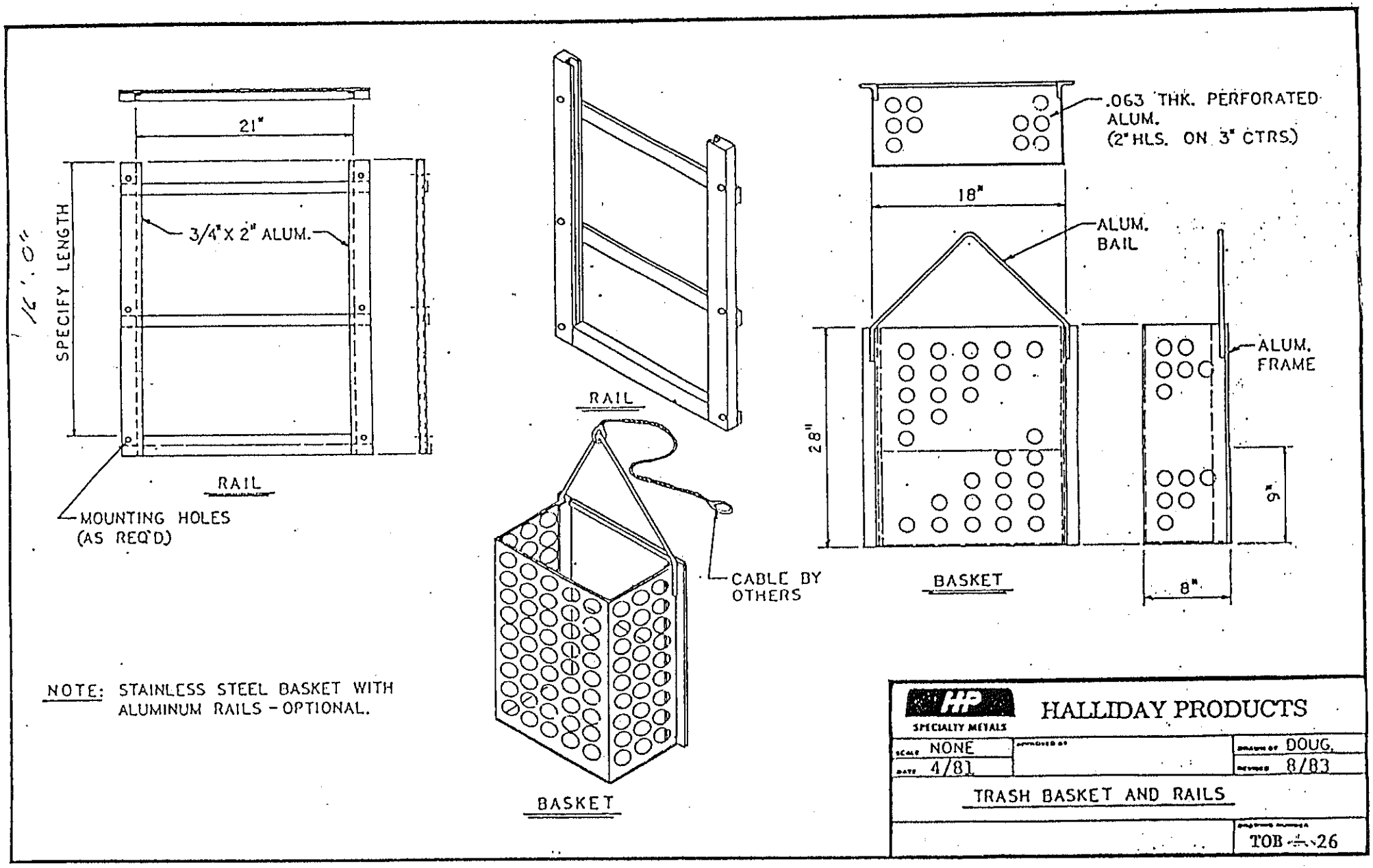

NOTE: OUR PRODUCTS CARRY A GUARANTEE OF 10 YEARS AGAINST DEFECTS IN MATERIALS AND/OR WORKMANSHIP.

APPENDIX B
TOWN OF BOONE
WATER AND SEWER ORDINANCE

EFFECTIVE 07/01/2010

Late Penalty Charge: $10.00
Meter Re-read Charge: $10.00
Meter Connect/Disconnect/Reconnect (Each): $20.00
Returned Check Charge: $25.00
Septic Disposal Fees (Per 100 Gallons): $7.00 Residential; $10.00 Commercial
Availability Fees (Per Gallon): $3.75 Water; $4.50 Sewer

Deposits (Outside City Limits Deposits are Double Rates Listed Below):

Residential		$	125.00
Commercial		$	225.00
Construction (Temporary):	3/4"	$	200.00
	2" or 3"	$	800.00

Minimum Fees Each - Water & Sewer:
(Outside City Limits Minimums are Double Rates Listed Below)

Minimum Residential 3/4" Includes 0 - 1,000 Gallons or	$14.25
Minimum Residential 3/4" Includes 1,001 - 2,000 Gallons	$15.75
Minimum Commercial 3/4" Includes First 2,000 Gallons	$21.50
Minimum Commercial 1" Includes First 2,000 Gallons	$26.50
Minimum Commercial 1 1/2" Includes First 2,000 Gallons	$31.50
Minimum Commercial 2" Includes First 2,000 Gallons	$31.50
Minimum Commercial 3" Includes First 2,000 Gallons	$41.50
Minimum Commercial 4" Includes First 2,000 Gallons	$51.50
Minimum Commercial 6" Includes First 2,000 Gallons	$71.50
Minimum Commercial 8" Includes First 2,000 Gallons	$91.50

Consumption - Water:
(Outside City Limits Consumption is Double Rates Listed Below)

2,001 to 4,999 Gallons	$5.90
4,999 to 9,999 Gallons	$6.15
10,000 to 14,999 Gallons	$6.40
15,000 to 19,999 Gallons	$6.65

Over 20,000 Gallons	$6.90
Consumption - Sewer:(Outside City Limits Consumption is Double Rates Listed Below)	
Over 2,000 per 1,000 Gallons - Residential	$5.25
Over 2,00 per 1,000 Gallons - Commercial	5.50

APPENDIX C
WATER AND SEWER USE ORDINANCE

NRCD DISCHARGE SCHEDULE

TYPE OF ESTABLISHMENT 60% DAILY FLOW

Airports, also RR Stations, bus terminals
(not including food service facilities).....3 gpd/passenger
Barber Shops.....30 gpd/per chair
Bars, Cocktail Lounges
(not including food services facilities).....12 gpd/per seat
Beauty Shops.....75 gpd/booth/bowl
Bowling Alleys.....30 gpd/per lane
Businesses(other than those listed here).....15 gpd/employee
Camps:
Construction or work camps.....36 gpd/per person
Summer camps.....36 gpd/per person
Camp grounds w/out water & sewer hookups.....60 gpd/campsite
Travel trailer/recreational vehicle park
with water & sewer hookup.....72 gpd/campsite
*Car Wash.....1107 gpd/per bay
Churches (not including food service, day care
and camps).....3 gpd/per seat
Country Clubs (resident members).....36 gpd/per person
Nonresident members.....12 gpd/per person
Day Care Facilities.....9 gpd/per person
Dwellings:
Residential single-family.....90 gpd/bedroom
*Commercial multi-family (condominiums, apartments, etc.).....150 gpd/bedroom
Factories (exclusive of industrial wastes)
Per shift.....15 gpd/per person
Add for showers per shift.....6 gpd/per person
*Food Service Facilities Restaurants
(including fast food).....30 gpd/per seat
24 hour restaurant.....30 gpd/per seat
Single service (exclusive of fast food).....30 gpd/per seat

Food Stands
(1) Per 100 square feet of total
floor space.....30 gpd
(2) Add per employee.....15 gpd
Hospitals.....180 gpd/per bed
*Laundries (self-services).....150 gpd/machine
Marinas.....6 gpd/boat slip
With bathhouse.....18 gpd/boat slip
Meat Markets
(1) Per 100 square feet of total
floor space.....30 gpd
(2) Add per employee.....15 gpd
Motels/Hotels.....72 gpd/per room
With cooking facilities in room.....105 gpd/per room
Nursing/Rest Home with laundry.....72 gpd/per bed
Without laundry.....36 gpd/per bed
Offices per shift.....15 gpd/per person
Residential Care Facilities.....36 gpd/per person
Schools:
Day Schools with cafeteria, gym, and showers..9 gpd/student
Day schools with cafeteria only.....7 gpd/student
Day schools with neither cafeteria or showers.6 gpd/student
Boarding.....36 gpd/per person
Service Station.....150 gpd/per water closet
Stadiums, Auditoriums, Theaters, Drive-ins.....3 gpd/seat or space
Stores, Shopping Centers, Malls.....72 gpd/1000sq.ft.
(Note: if food service is included)....add..24 gpd/seat
Swimming Pools and Bathhouses.....6 gpd/per person

* = Locally derived data, based on historical figures of actual peak usage.

Statutory Authority G.S. 143-215.1; 130-160
North Carolina Department of Natural Resources and Community Development Discharge Schedule

APPENDIX D

USER CHARGE METHODOLOGY

1. Debt service based on 3% interest, 20 year declining payments
2. Billable Flow Projections: Year 1-1.35 mgd; Year 20-2.12 mgd
3. Annual O & M costs are based on a Year One estimate of $888,047 and Year 20 estimate of $1,643,273, projected linearly.

(Annual Debt Service(Principal & Interest) + Annual O & M) ÷ (Billable Flow (Gallons) x 365) x 1000 = Cost Per 1000 Gallons

Methodology for toxics must be determined on a case-by-case basis according to the specific nature of the toxic and its impact on the POTW.